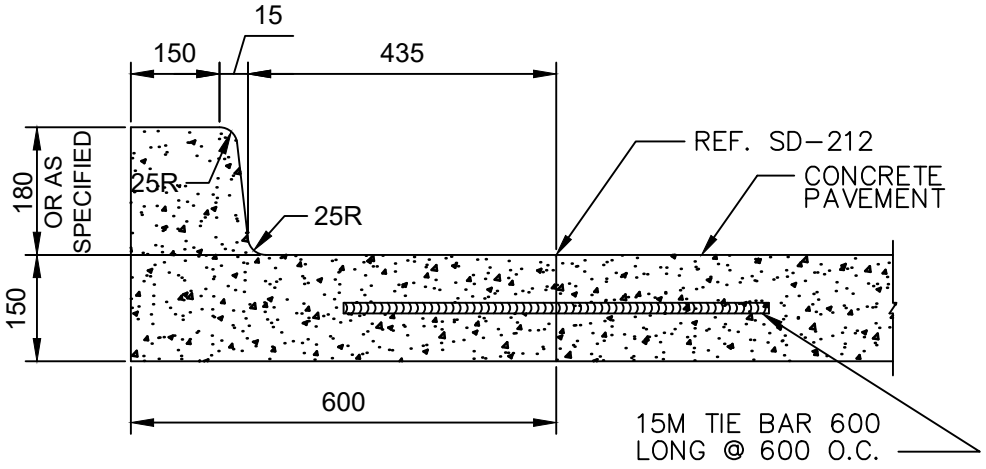

CURB AND GUTTER
FOR CONCRETE PAVEMENTS

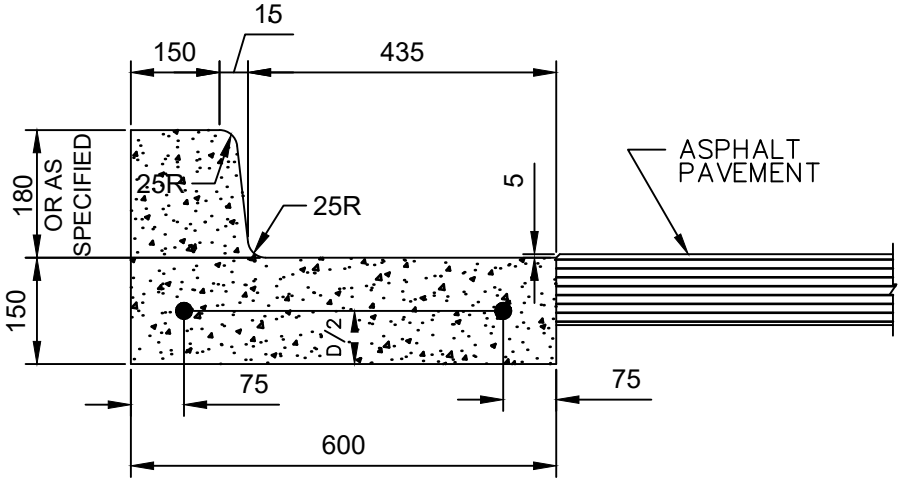

CURB AND GUTTER
FOR ASPHALT PAVEMENTS

NOTE: 1. REDUCE CURB HEIGHT TO 40. APPLICABLE FOR PRIVATE APPROACHES ON LOCAL RESIDENTIAL STREETS. REF SD-202B

2. TRANSVERSE SAW CUT EVERY 3000 OR AT PAVEMENT JOINTS.

3. THIS DETAIL SHALL ONLY BE USED FOR REPAIRS OF EXISTING CURB AND GUTTER OR AS DIRECTED BY THE CONTRACT ADMINISTRATOR.

DIMENSIONS IN MILLIMETRES

THE CITY OF WINNIPEG
PUBLIC WORKS DEPARTMENT

Reference Spec. No.
CW 3325

Revisions

No.	Date	Description	By
1.	OCT 24	ADDED NOTE 3	R.B.

CURB AND GUTTER

Designed By: B.P.	Drawn By: R.B.	Scale : N.T.S.
Checked By: D.R.K.	Date: 2008-12-15	Drawing No. SD-200
Approved: PAVEMENT MANAGEMENT BRANCH		

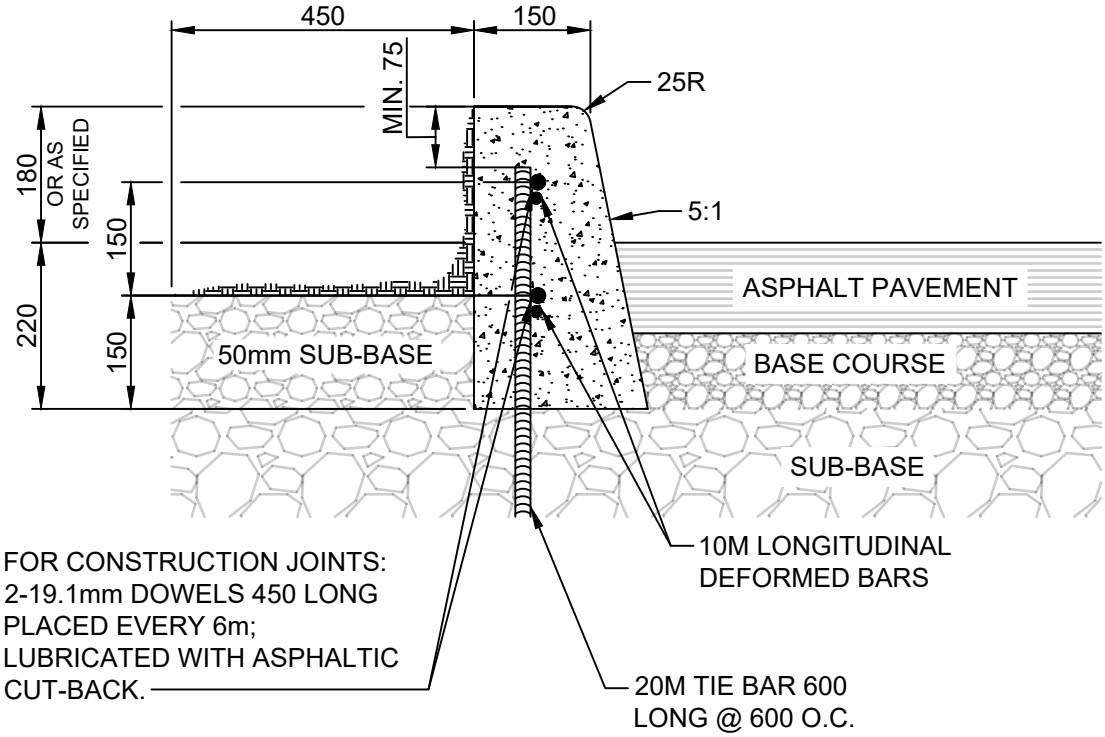

NOTES:

1. TRANSVERSE SAW CUT EVERY 3m OR AT PAVEMENT JOINTS
2. TRANSVERSE SAW CUTS ARE TO BE A MAXIMUM DEPTH OF 25mm
3. FACE OF CURB SHALL BE SEALED IN ACCORDANCE WITH CW 3250

DIMENSIONS IN MILLIMETRES

THE CITY OF WINNIPEG
PUBLIC WORKS DEPARTMENT

Reference Spec. No.
CW 3325

Revisions

No.	Date	Description	By

BARRIER CURB FOR ASPHALT PAVEMENT

Designed By: A.G.	Drawn By: R.B.	Scale : N.T.S
Checked By: B.K.	Date: 2025–12–15	Drawing No. SD–200A
Approved: PAVEMENT MANAGEMENT BRANCH		

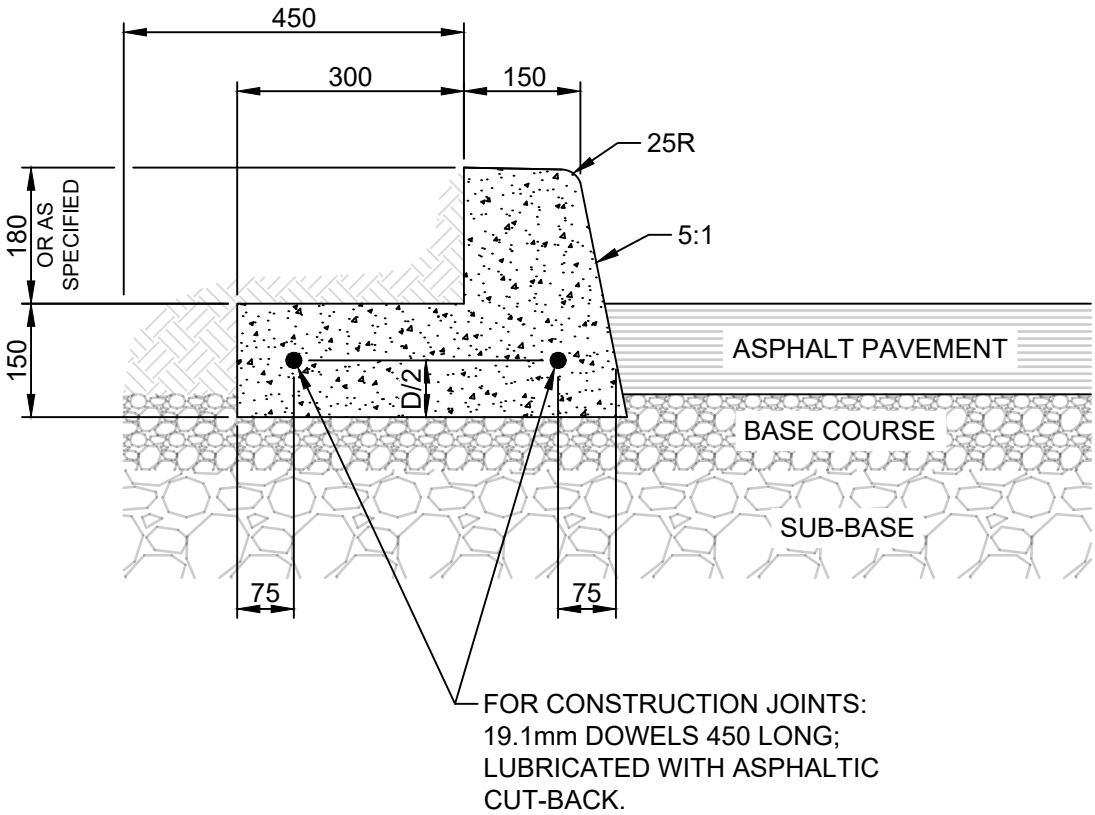

NOTES:

1. TRANSVERSE SAW CUT EVERY 3m OR AT PAVEMENT JOINTS
2. TRANSVERSE SAW CUTS ARE TO BE A MAXIMUM DEPTH OF 25mm
3. FACE OF CURB SHALL BE SEALED IN ACCORDANCE WITH CW 3250

DIMENSIONS IN MILLIMETRES

THE CITY OF WINNIPEG PUBLIC WORKS DEPARTMENT	Revisions		
Reference Spec. No. CW 3325	No.	Date	Description	By
BARRIER CURB AND REVERSED GUTTER FOR ASPHALT PAVEMENT	Designed By: A.G.	Drawn By: T.K.	Scale : N.T.S
	Checked By: B.K.	Date: 2025–12–15	Drawing No. SD–200B
	Approved: PAVEMENT MANAGEMENT BRANCH		

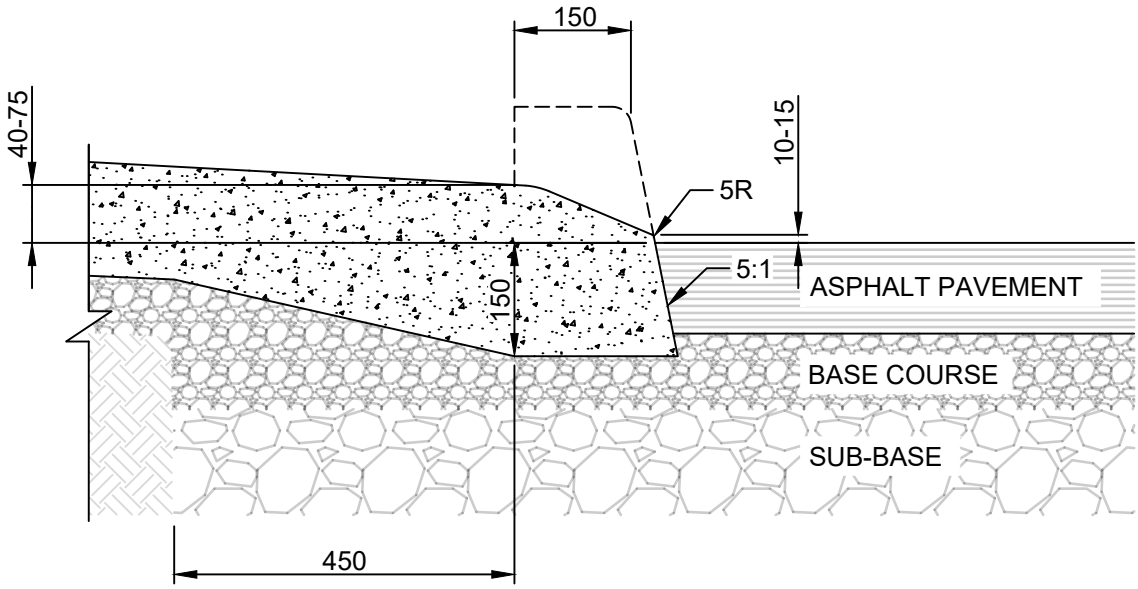

NOTES:

1. TRANSVERSE SAW CUT EVERY 3m OR AT PAVEMENT JOINTS
2. TRANSVERSE SAW CUTS ARE TO BE A MAXIMUM DEPTH OF 25mm
3. FOR CONSTRUCTION JOINTS INSTALL TWO 19.1mm DOWELS 450 LONG; LUBRICATED WITH ASPHALTIC CUT-BACK. REF SD-200B.
4. FACE OF CURB SHALL BE SEALED IN ACCORDANCE WITH CW 3250

DIMENSIONS IN MILLIMETRES

THE CITY OF WINNIPEG
PUBLIC WORKS DEPARTMENT

Reference Spec. No.
CW 3325

Revisions

No.	Date	Description	By

LIP CURB WITH INTEGRAL APPROACH FOR ASPHALT PAVEMENT

Designed By: A.G.	Drawn By: T.K.	Scale : N.T.S
Checked By: B.K.	Date: 2025–12–15	Drawing No. SD–202F
Approved: PAVEMENT MANAGEMENT BRANCH		

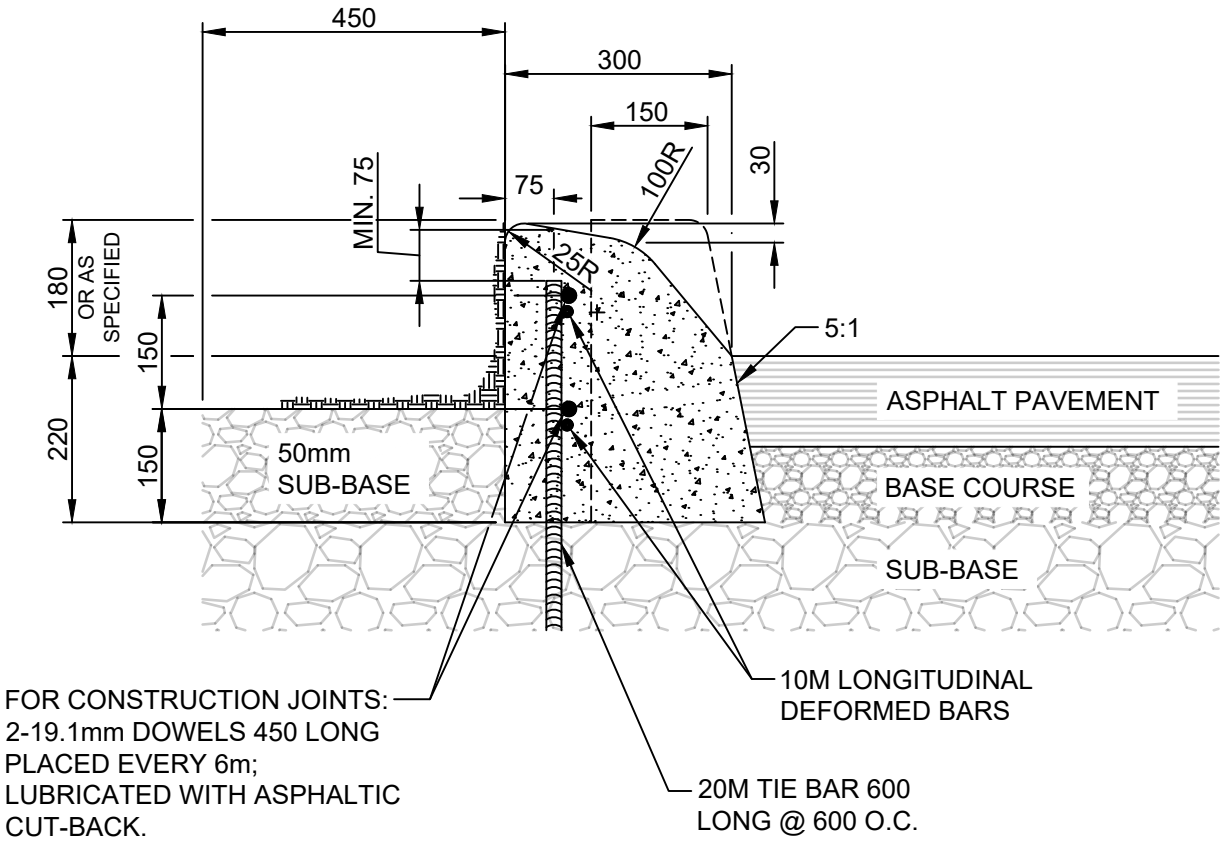

NOTES:

1. TRANSVERSE SAW CUT EVERY 3m OR AT PAVEMENT JOINTS
2. TRANSVERSE SAW CUTS ARE TO BE A MAXIMUM DEPTH OF 25mm
3. FACE OF CURB SHALL BE SEALED IN ACCORDANCE WITH CW 3250

DIMENSIONS IN MILLIMETRES

Winnipeg

THE CITY OF WINNIPEG
PUBLIC WORKS DEPARTMENT

Reference Spec. No.
CW 3325

Revisions

No.	Date	Description	By

MODIFIED BARRIER CURB FOR ASPHALT PAVEMENT

Designed By: A.G.	Drawn By: R.B.	Scale : N.T.S
Checked By: B.K.	Date: 2025–12–15	Drawing No. SD–203C
Approved: PAVEMENT MANAGEMENT BRANCH		

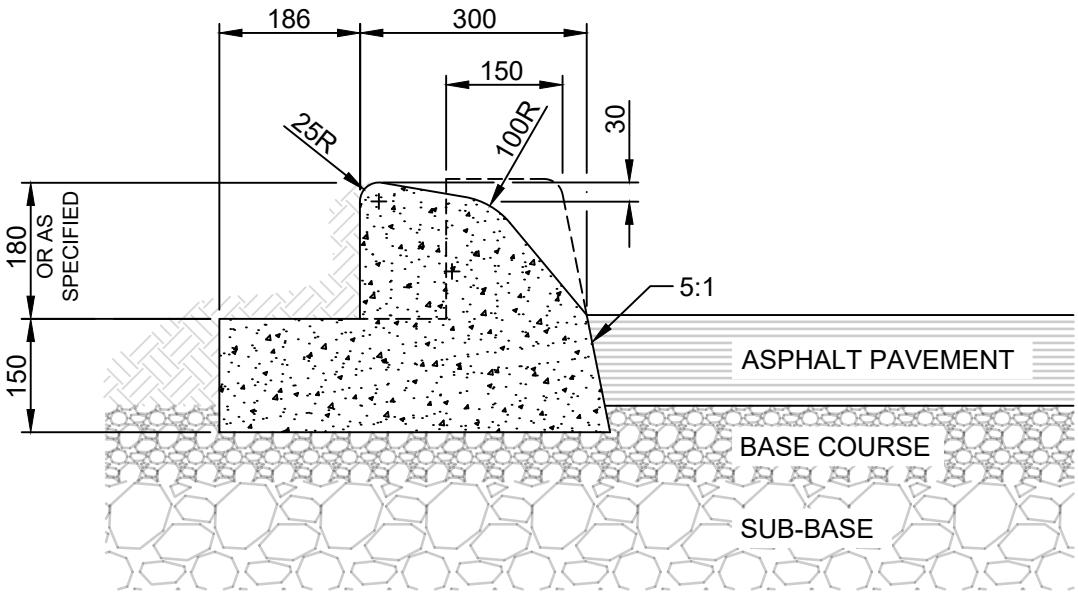

NOTES:

1. TRANSVERSE SAW CUT EVERY 3m OR AT PAVEMENT JOINTS
2. TRANSVERSE SAW CUTS ARE TO BE A MAXIMUM DEPTH OF 25mm
3. FOR CONSTRUCTION JOINTS INSTALL TWO 19.1mm DOWELS 450 LONG; LUBRICATED WITH ASPHALTIC CUT-BACK. REF SD-200B.
4. FACE OF CURB SHALL BE SEALED IN ACCORDANCE WITH CW 3250

DIMENSIONS IN MILLIMETRES

THE CITY OF WINNIPEG
PUBLIC WORKS DEPARTMENT

Reference Spec. No.
CW 3325

Revisions

No.	Date	Description	By

MODIFIED BARRIER CURB WITH REVERSED GUTTER FOR ASPHALT PAVEMENT

Designed By: A.G.	Drawn By: T.K.	Scale : N.T.S
Checked By: B.K.	Date: 2025–12–15	Drawing No. SD–203D
Approved: PAVEMENT MANAGEMENT BRANCH		

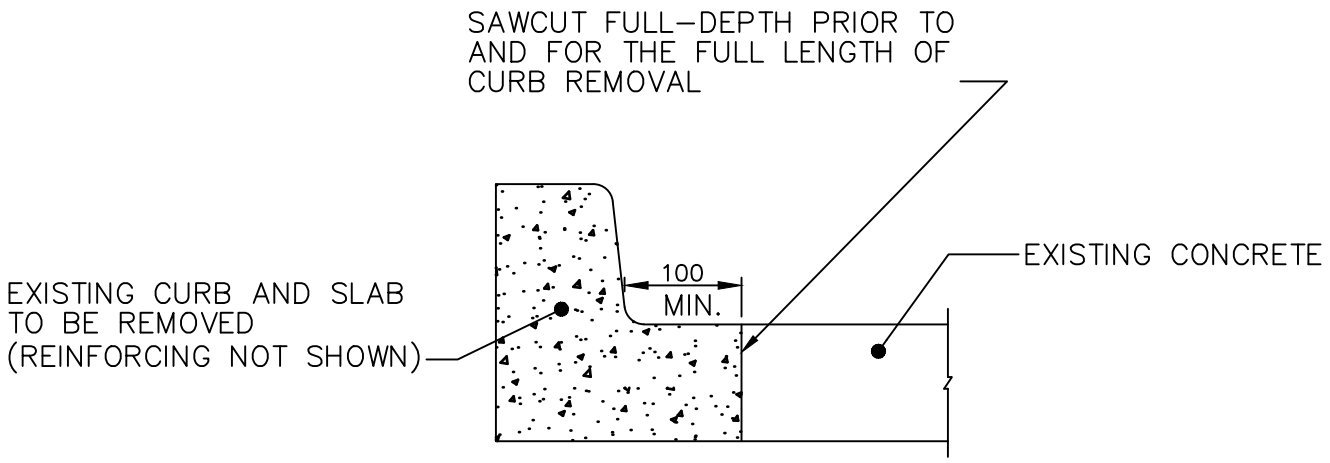

PAVEMENT REMOVAL FOR BARRIER CURB

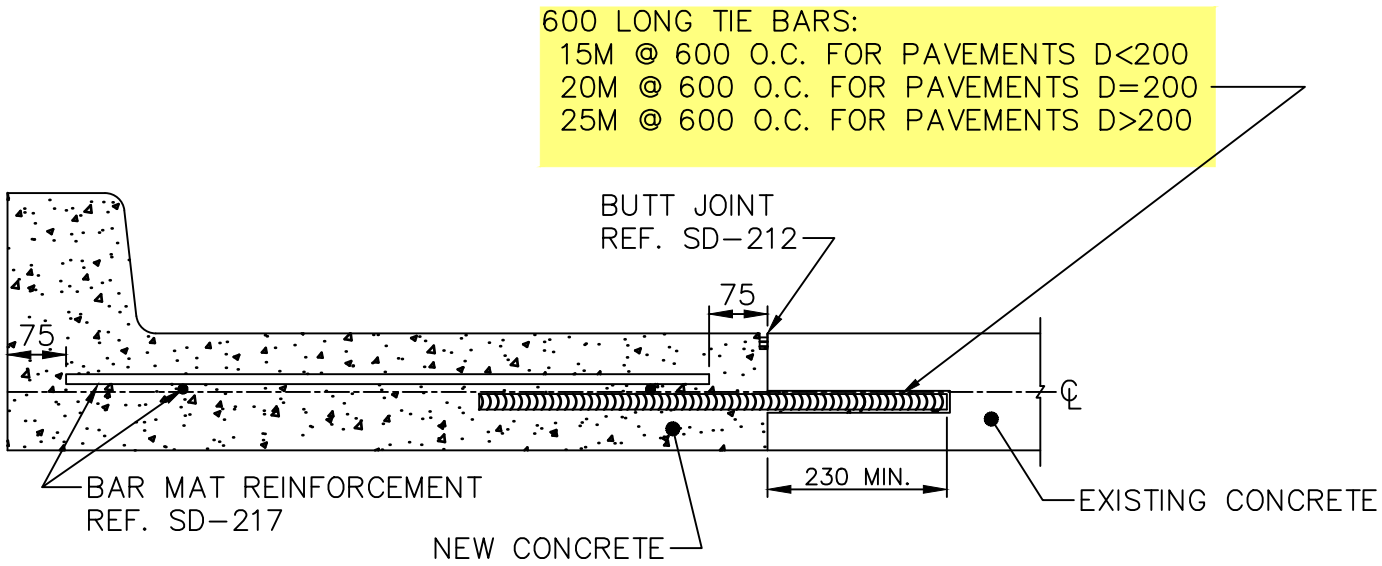

PAVEMENT WIDENING

NOTE:
TRANSVERSE SAWCUT TYP. 4.0–5.0m OR AT PAVEMENT JOINTS.

DIMENSIONS IN MILLIMETRES

THE CITY OF WINNIPEG
PUBLIC WORKS DEPARTMENT

Reference Spec. No.
CW 3230, CW 3310

Revisions

No.	Date	Description	By
2.	OCT 24	TIE BAR SIZE AND TRANSVERSE CUTS	A.G.
1.	JAN 03	GENERAL REVISION	L.W.B.

CONCRETE PAVEMENT WIDENING

Designed By: L.S.W.L.
Drawn By: R.B.
Scale : N.T.S.
Checked By: D.R.K.
Date: 2025–12–15
Drawing No. SD–207
Approved: PAVEMENT MANAGEMENT BRANCH

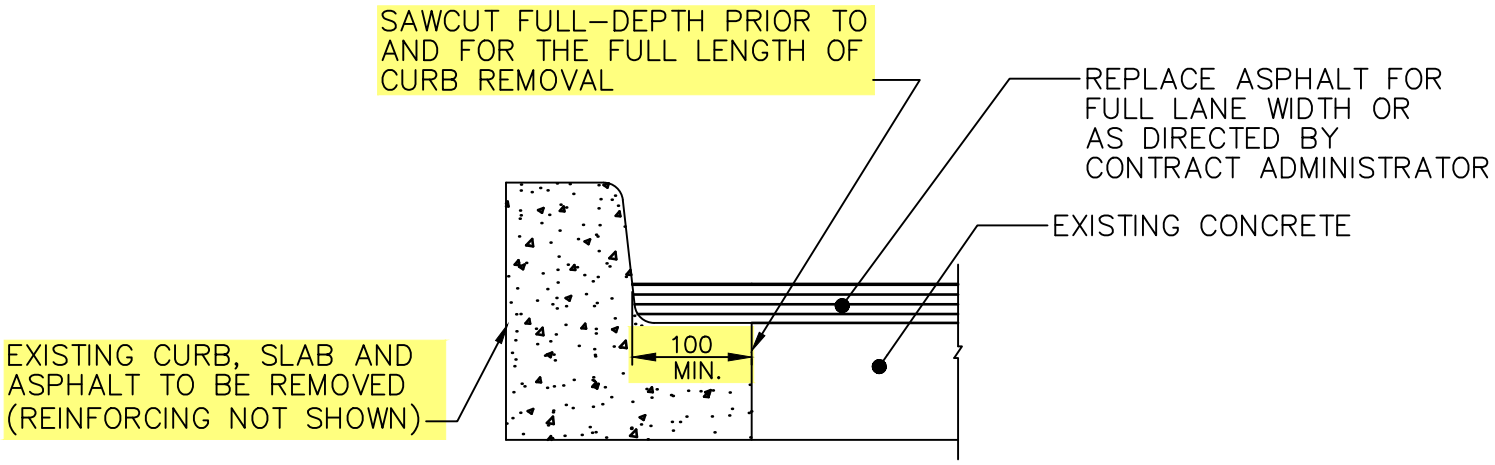

PAVEMENT REMOVAL

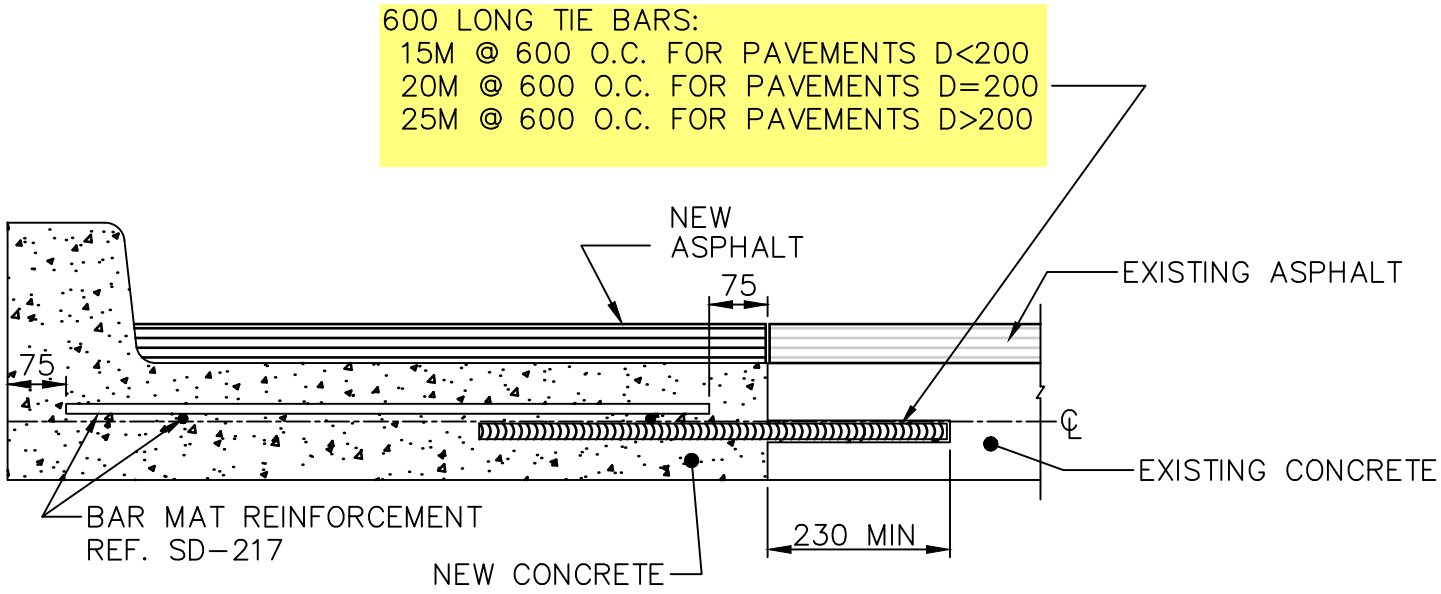

PAVEMENT WIDENING

NOTE:
TRANSVERSE SAWCUT TYP. 4.0–5.0m OR AT PAVEMENT JOINTS.

DIMENSIONS IN MILLIMETRES

THE CITY OF WINNIPEG
PUBLIC WORKS DEPARTMENT

Reference Spec. No.
CW 3230, CW 3310

Revisions

No.	Date	Description	By
2.	MAY 25	TIE BAR SIZE AND TRANSVERSE SAWCUT	R.B.
1.	JAN 03	GENERAL REVISION	L.W.B.

PAVEMENT WIDENING
(CONCRETE PAVEMENT WITH ASPHALT OVERLAY)

Designed By: A.G.	Drawn By: R.B.	Scale : N.T.S.
Checked By: B.K.	Date: 2025–12–15	Drawing No. SD–208
Approved: PAVEMENT MANAGEMENT BRANCH		

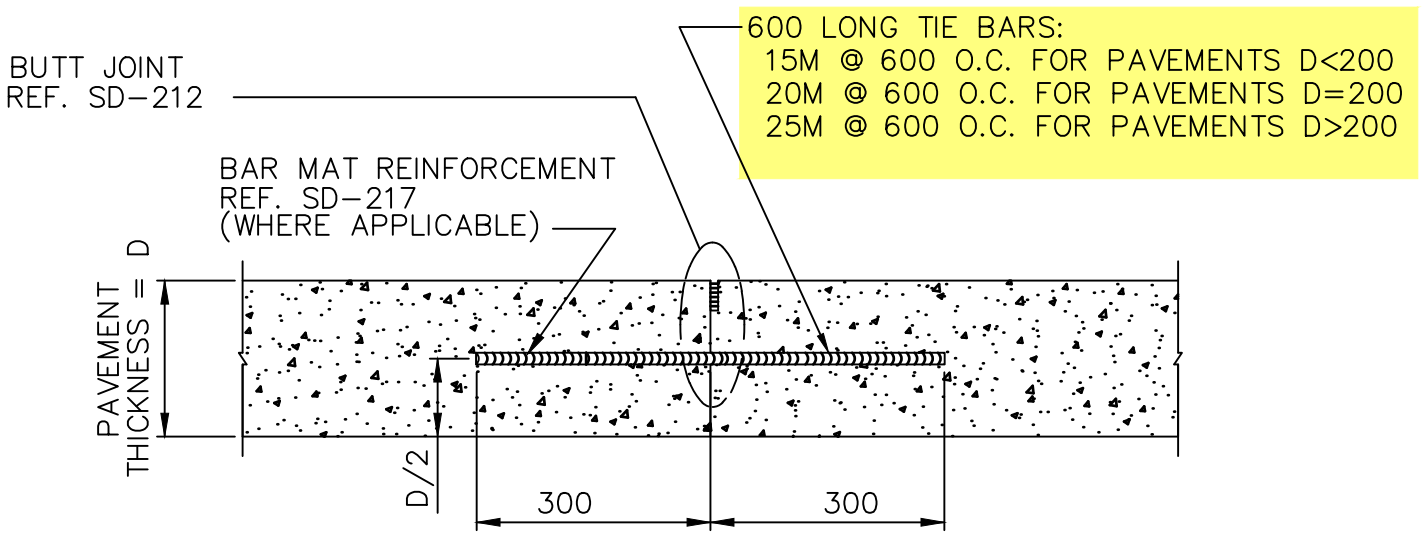

FORMED LONGITUDINAL JOINT

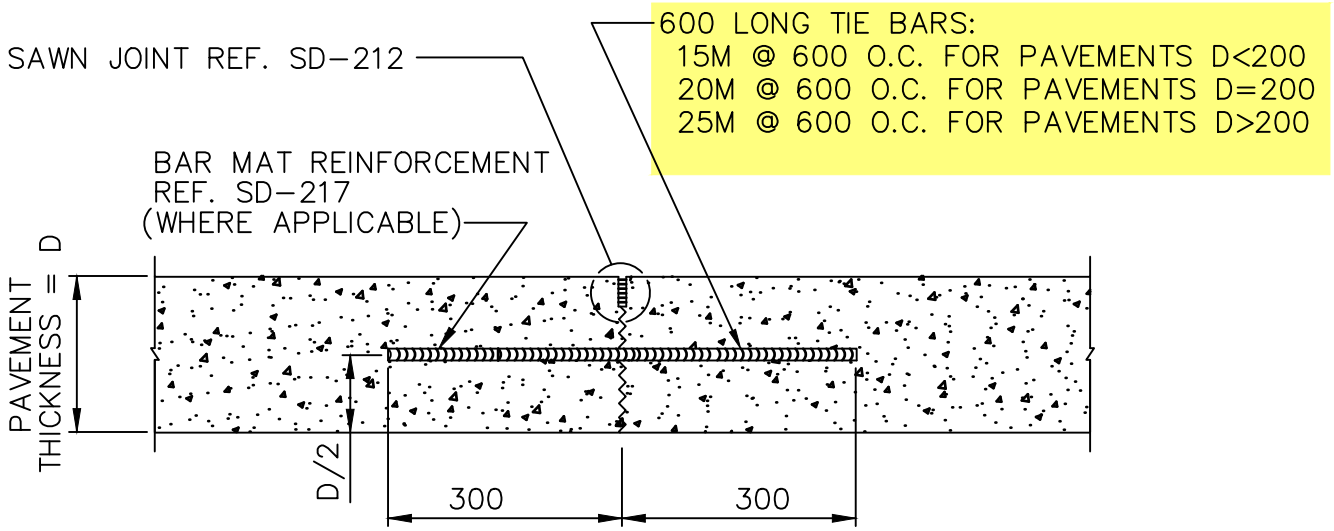

SAWN LONGITUDINAL JOINT

DIMENSIONS IN MILLIMETRES

THE CITY OF WINNIPEG
PUBLIC WORKS DEPARTMENT

Reference Spec. No.
CW 3230, CW 3310

Revisions

No.	Date	Description	By
1.	OCT 24	TIE BAR SIZE	A.G.

LONGITUDINAL JOINT FOR CONCRETE PAVEMENT

Designed By: L.S.W.L.	Drawn By: R.B.	Scale : N.T.S.
Checked By: D.R.K.	Date: 2025-12-15	Drawing No. SD-210A
Approved: PAVEMENT MANAGEMENT BRANCH		

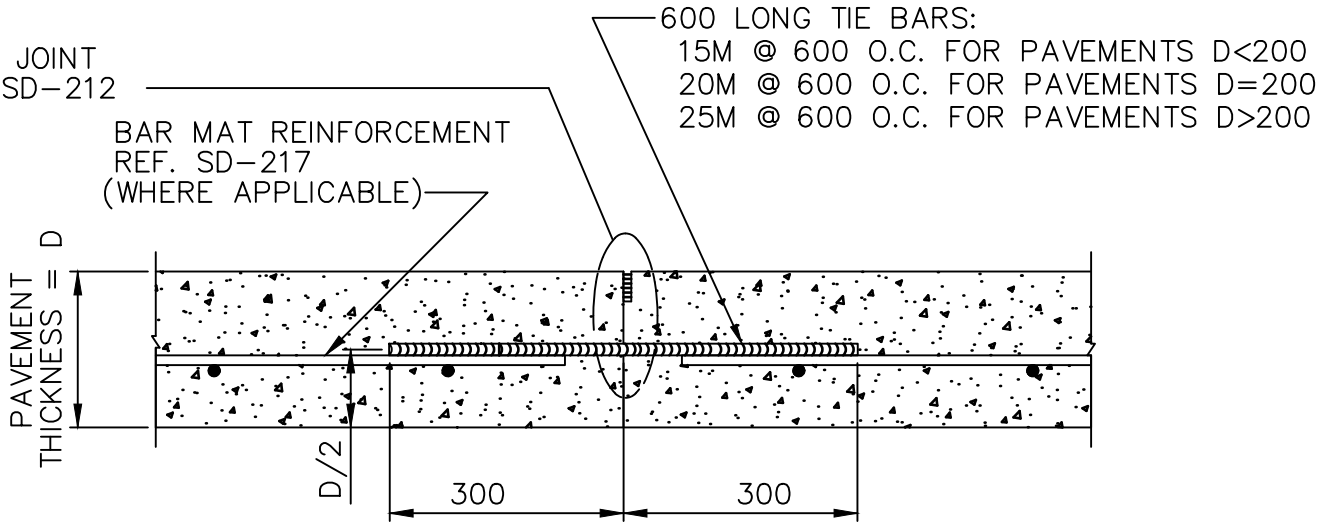

FORMED LONGITUDINAL JOINT

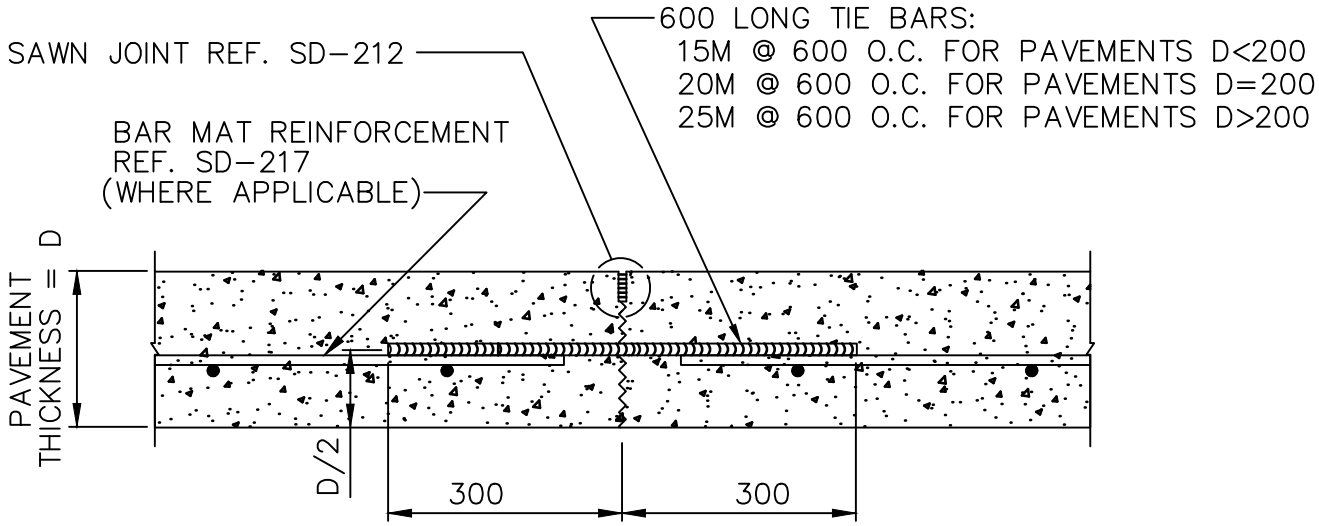

SAWN LONGITUDINAL JOINT

DIMENSIONS IN MILLIMETRES

THE CITY OF WINNIPEG
PUBLIC WORKS DEPARTMENT

Reference Spec. No.
CW 3230, CW 3310

Revisions

No.	Date	Description	By

LONGITUDINAL JOINT FOR CONCRETE PAVEMENTS WITH BAR MAT REINFORCEMENT

Designed By: A.G.	Drawn By: R.B.	Scale : N.T.S.
Checked By: B.K.	Date: 2025-12-15	Drawing No. SD-210B
Approved: PAVEMENT MANAGEMENT BRANCH		

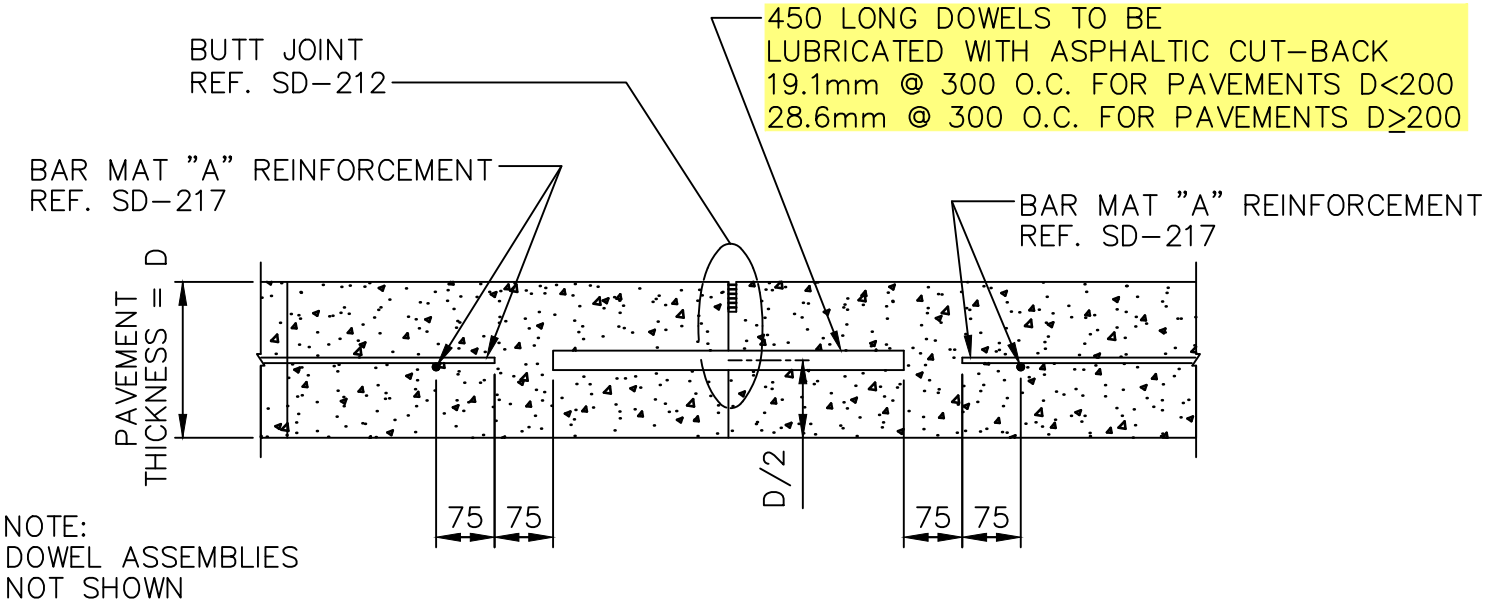

CONSTRUCTION JOINT MAT "A"

DIMENSIONS IN MILLIMETRES

THE CITY OF WINNIPEG
PUBLIC WORKS DEPARTMENT

Reference Spec. No.
CW 3230, CW 3310

Revisions

No.	Date	Description	By
1.	OCT 24	GENERAL REVISION	R.B.

CONSTRUCTION JOINT FOR REINFORCED CONCRETE PAVEMENT

Designed By: A.G.	Drawn By: R.B.	Scale : N.T.S.
Checked By: B.K.	Date: 2025-12-15	Drawing No. SD-211A
Approved: PAVEMENT MANAGEMENT BRANCH		

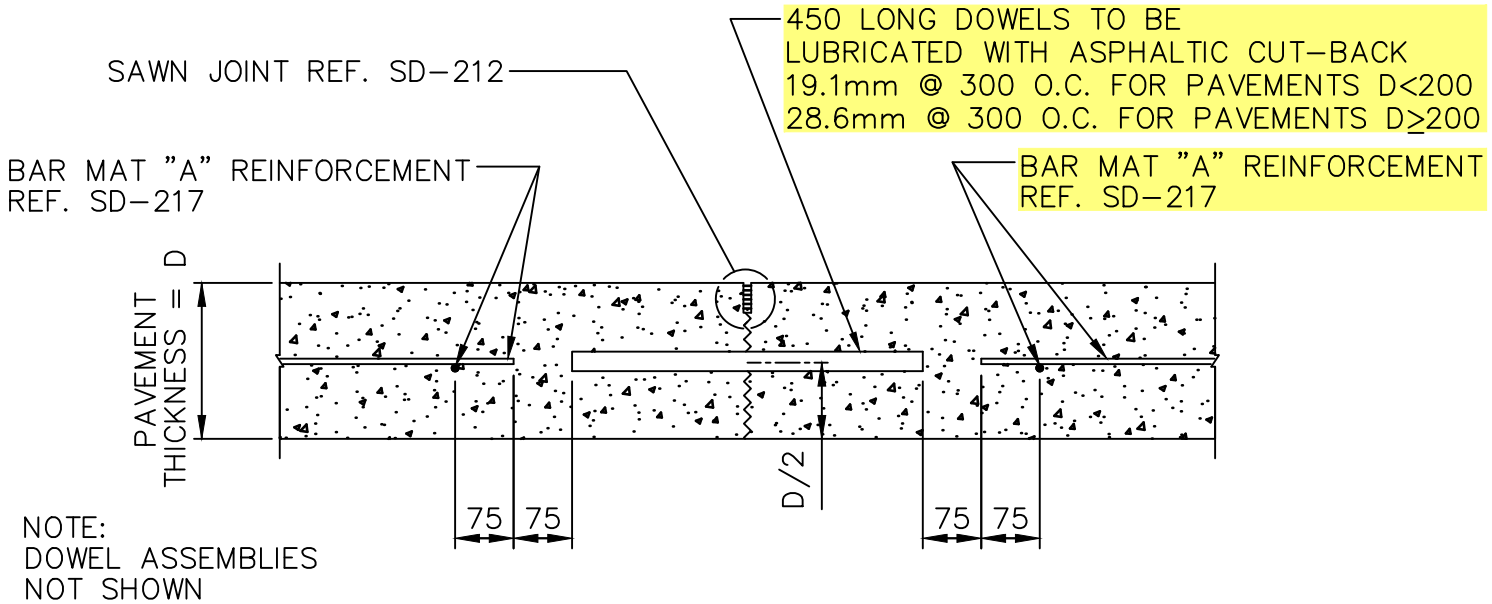

CONTRACTION JOINT MAT "A"

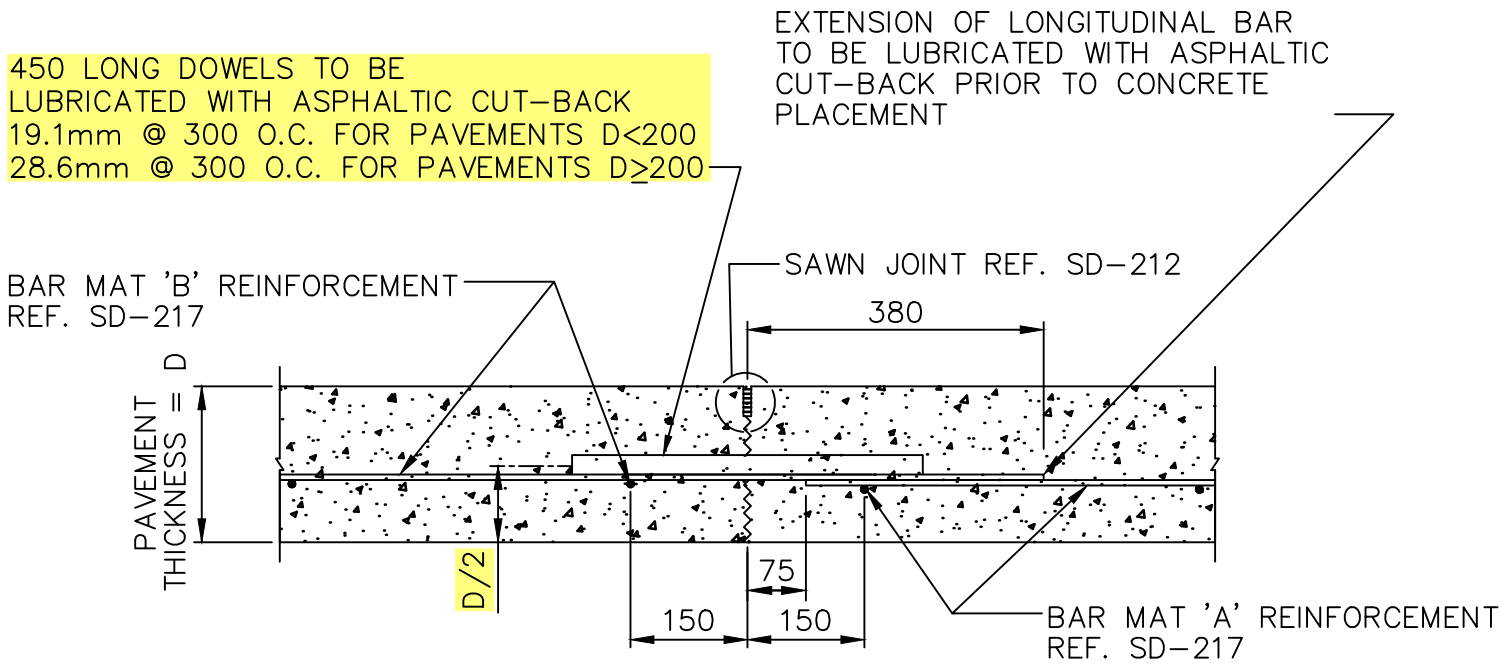

CONTRACTION JOINT MAT "B"

DIMENSIONS IN MILLIMETRES

THE CITY OF WINNIPEG
PUBLIC WORKS DEPARTMENT

Reference Spec. No.
CW 3230, CW 3310

Revisions

No.	Date	Description	By

CONTRACTION JOINT FOR REINFORCED CONCRETE PAVEMENT

Designed By: A.G.	Drawn By: R.B.	Scale : N.T.S.
Checked By: B.K.	Date: 2025-12-15	Drawing No. SD-211B
Approved: PAVEMENT MANAGEMENT BRANCH		

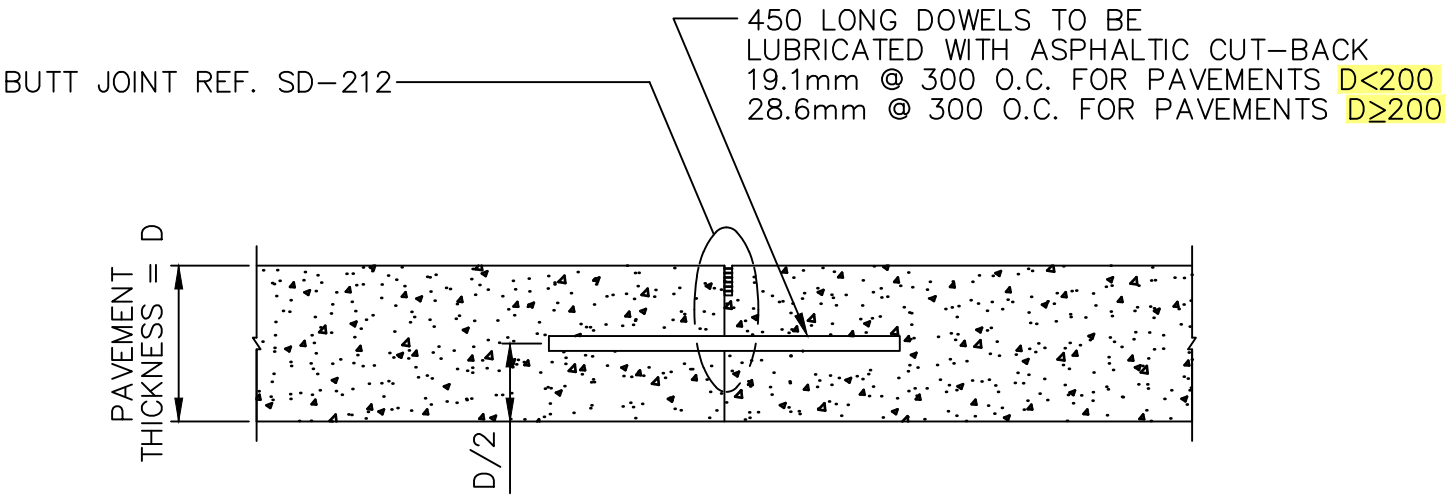

CONSTRUCTION JOINT

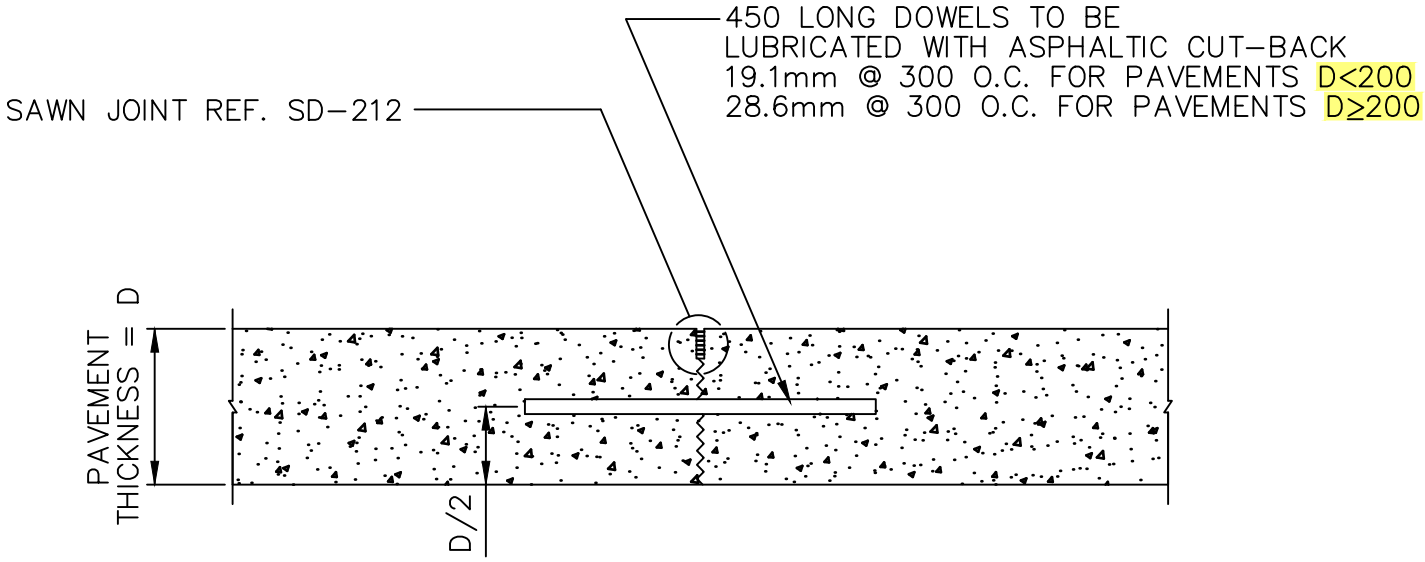

CONTRACTION JOINT

NOTE: DOWEL ASSEMBLIES NOT SHOWN.

DIMENSIONS IN MILLIMETRES

THE CITY OF WINNIPEG
PUBLIC WORKS DEPARTMENT

Reference Spec. No.
CW 3230, CW 3310

Revisions

No.	Date	Description	By
1.	OCT 24	GENERAL REVISION	A.G.

CONSTRUCTION JOINT AND CONTRACTION JOINT FOR PLAIN DOWELLED CONCRETE PAVEMENT

Designed By: L.S.W.L.
Drawn By: R.B.
Scale : N.T.S.
Checked By: D.R.K.
Date: 2025-12-15
Approved: PAVEMENT MANAGEMENT BRANCH
Drawing No. SD-211C

TRANSVERSE JOINT: t=D/3
LONGITUDINAL JOINT: t=D/4

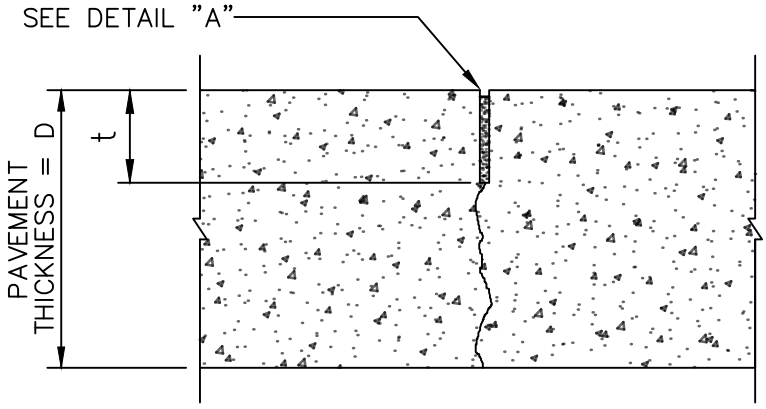

SAWN JOINT

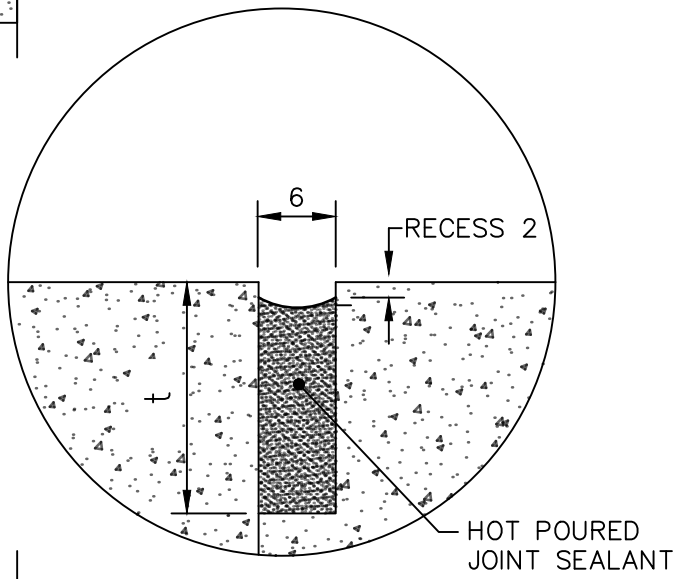

DETAIL "A"

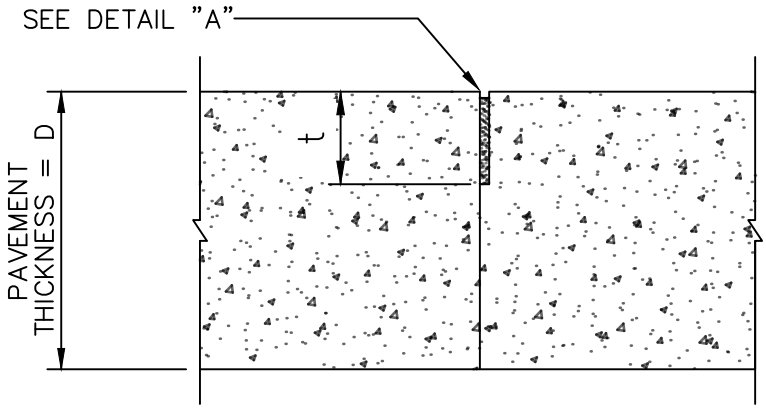

BUTT JOINT

NOTES:
1. SEALING OF CONCRETE JOINTS NOT REQUIRED IF THE JOINTS ARE BEING OVERLAYED WITH ASPHALT.
2. REINFORCING NOT SHOWN.

DIMENSIONS IN MILLIMETRES

Winnipeg

THE CITY OF WINNIPEG
PUBLIC WORKS DEPARTMENT

Reference Spec. No.
CW 3230, CW 3310

Revisions

No.	Date	Description	By
2.	MAY 25	SAW CUT WIDTH AND DEPTH	R.B.
1.	OCT 06	GENERAL REVISION	L.W.B.

SAWN JOINT AND BUTT JOINT FOR CONCRETE PAVEMENTS

Designed By: A.G.	Drawn By: R.B.	Scale : N.T.S.
Checked By: B.K.	Date: 2025-12-15	Drawing No. SD-212
Approved: PAVEMENT MANAGEMENT BRANCH		

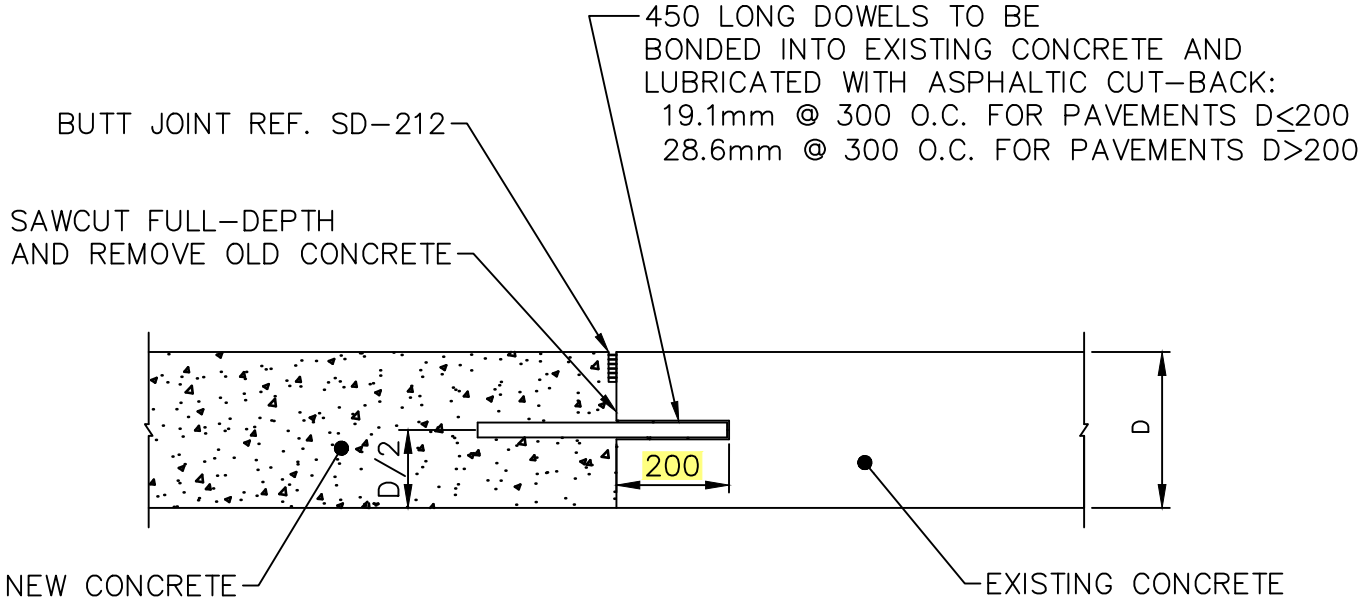

TRANSVERSE (MOVING) JOINT

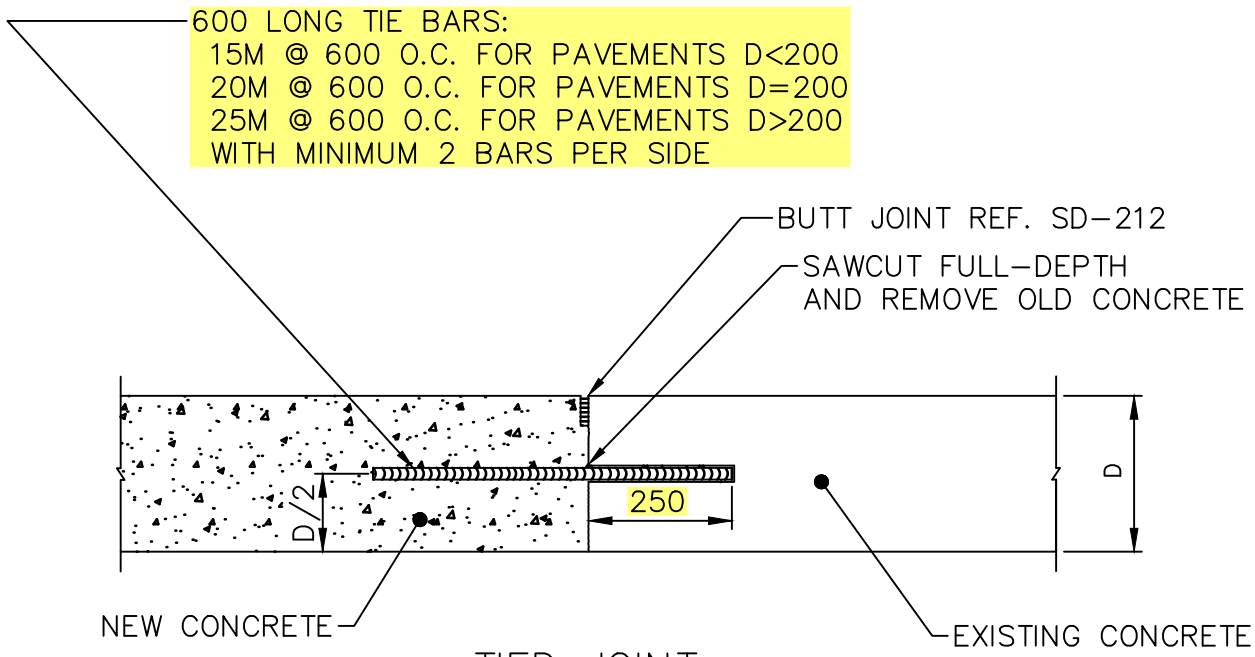

TIED JOINT

NOTE:
BAR MAT REINFORCEMENT
NOT SHOWN REF. SD-217

DIMENSIONS IN MILLIMETRES

THE CITY OF WINNIPEG
PUBLIC WORKS DEPARTMENT

Reference Spec. No.
CW 3230, CW 3310

Revisions

No.	Date	Description	By
2.	OCT 24	TIE BAR DETAILS	A.G.
1.	OCT 13	GENERAL REVISION	L.W.B.

FULL-DEPTH PATCHES AND
SLAB REPLACEMENT

Designed By: B.P.	Drawn By: R.B.	Scale : N.T.S.
Checked By: D.R.K.	Date: 2025-12-15	Drawing No. SD-213B
Approved: PAVEMENT MANAGEMENT BRANCH		

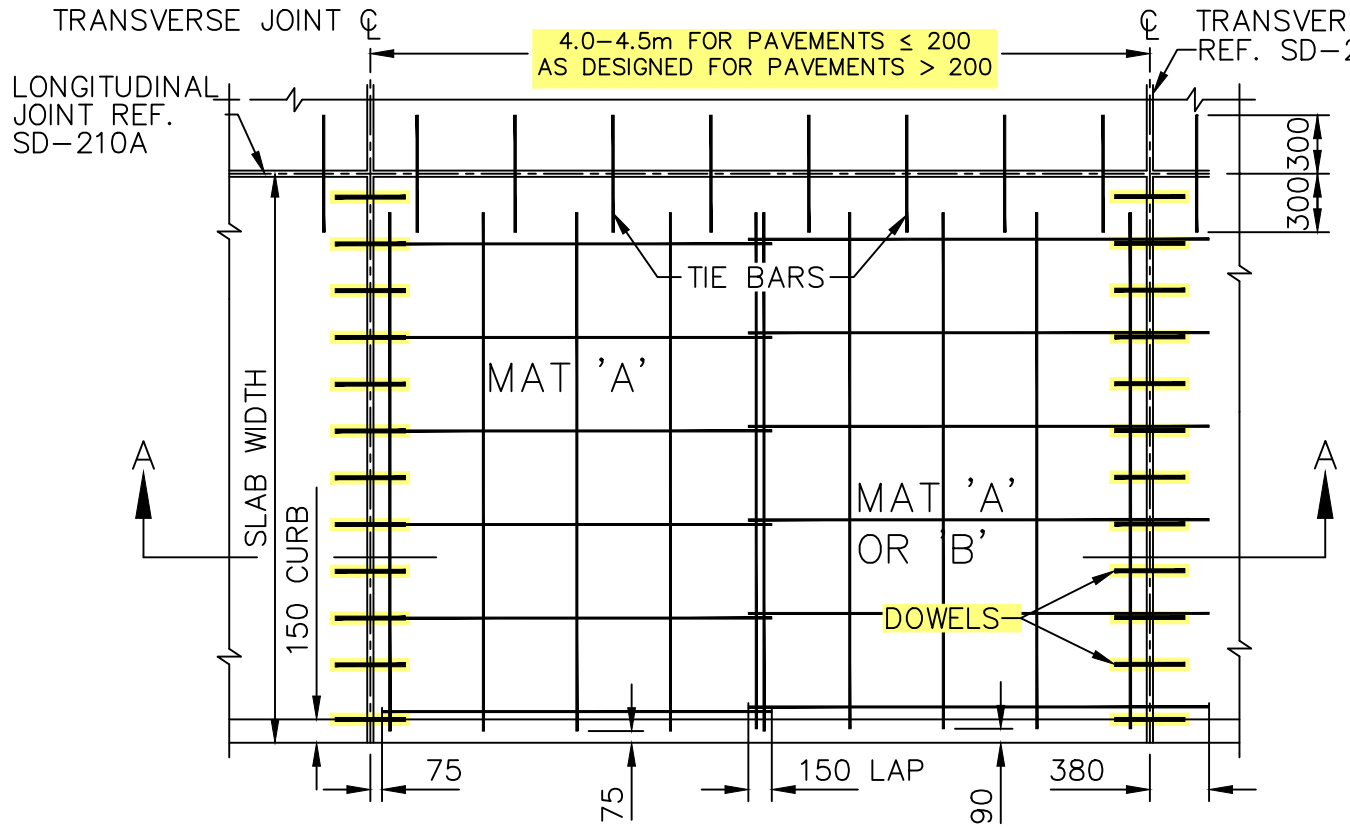

PART PLAN OF PAVEMENT WITH CURB

SHOWING LAYOUT OF JOINTS AND REINFORCEMENT

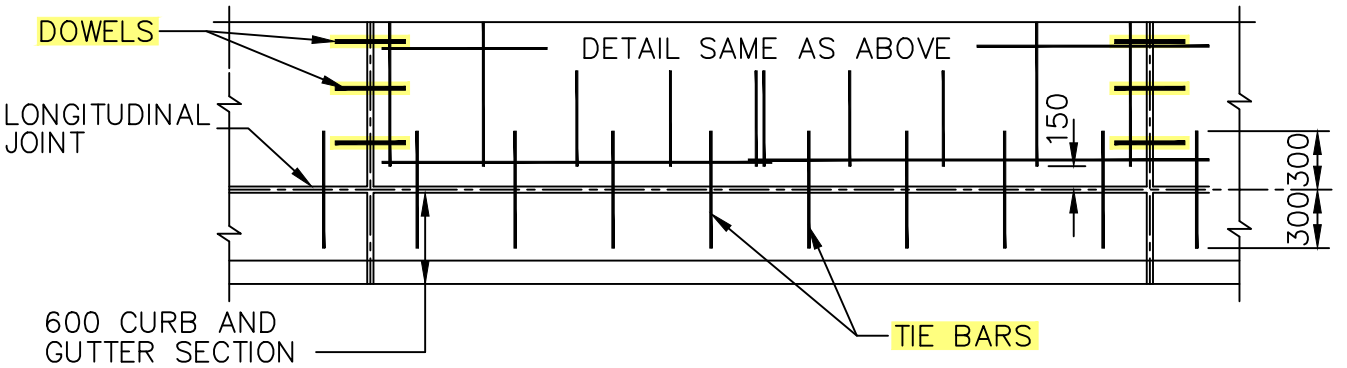

PART PLAN OF PAVEMENT WITH CURB AND GUTTER

SHOWING LAYOUT OF JOINTS AND REINFORCEMENT

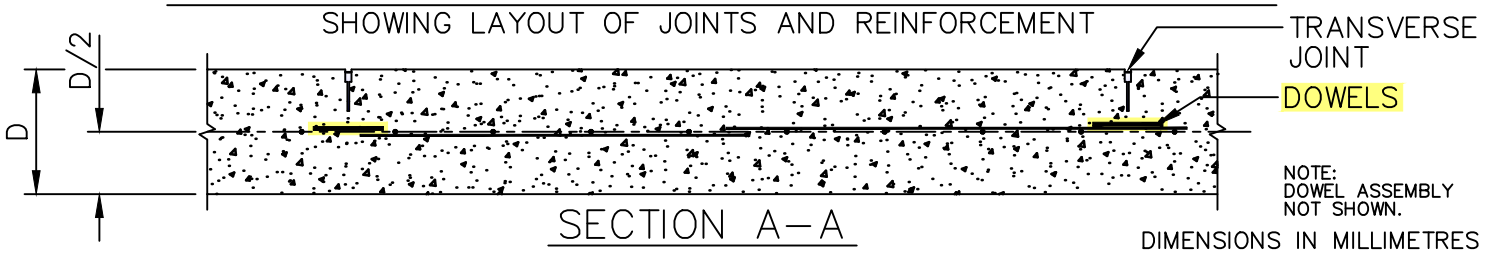

SECTION A-A

NOTE:
DOWEL ASSEMBLY
NOT SHOWN.

DIMENSIONS IN MILLIMETRES

THE CITY OF WINNIPEG

PUBLIC WORKS DEPARTMENT

Reference Spec. No.
CW 3230, CW 3310

Revisions

No.	Date	Description	By
1.	OCT 24	ADDED DOWELS	R.B.
1.	JAN 03	GENERAL REVISION	L.W.B.

STEEL REINFORCEMENT FOR
REINFORCED CONCRETE
PAVEMENT

Designed By: A.G.	Drawn By: R.B.	Scale : N.T.S.
Checked By: B.K.	Date: 2025-12-15	Drawing No. SD-216
Approved: PAVEMENT MANAGEMENT BRANCH		

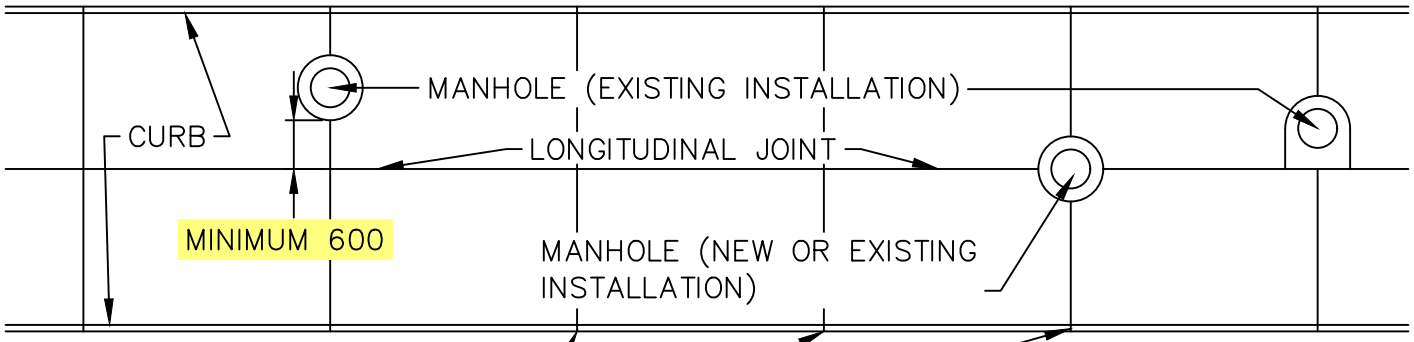

TRANSVERSE JOINT SPACING TO BE ADJUSTED SO THAT JOINT FALLS ON CENTER OF MANHOLE WHERE POSSIBLE

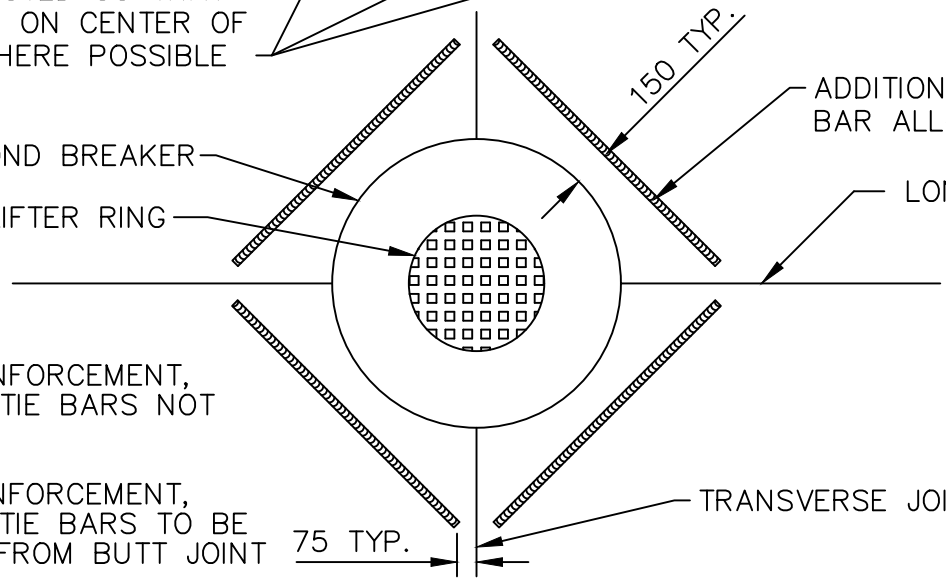

NOTE:

1. BAR MAT REINFORCEMENT, DOWELS AND TIE BARS NOT SHOWN
2. BAR MAT REINFORCEMENT, DOWELS AND TIE BARS TO BE 100mm TYP. FROM BUTT JOINT

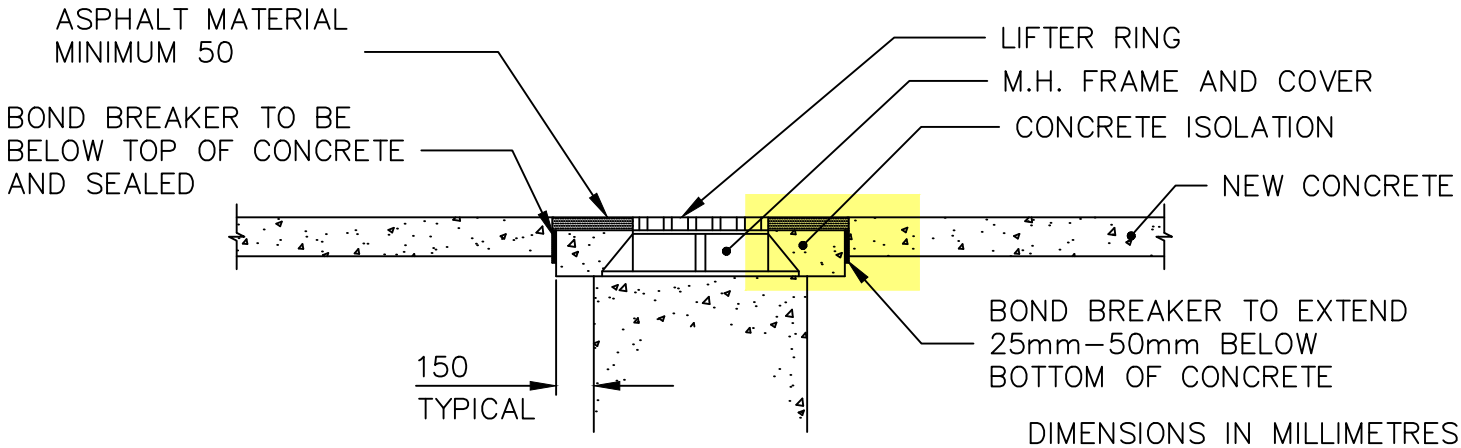

DIMENSIONS IN MILLIMETRES

THE CITY OF WINNIPEG
PUBLIC WORKS DEPARTMENT

Reference Spec No.
CW 3310

Revisions

No.	Date	Description	By
2.	DEC 25	GENERAL REVISION	A.G.
1.	JAN 03	GENERAL REVISION	L.W.B.

MANHOLE ISOLATION DETAIL FOR CONCRETE PAVEMENTS

Designed By: L.S.W.L.	Drawn By: R.B.	Scale : N.T.S.
Checked By: D.R.K.	Date: 2025-12-15	Drawing No. SD-220A
Approved: PAVEMENT MANAGEMENT BRANCH		

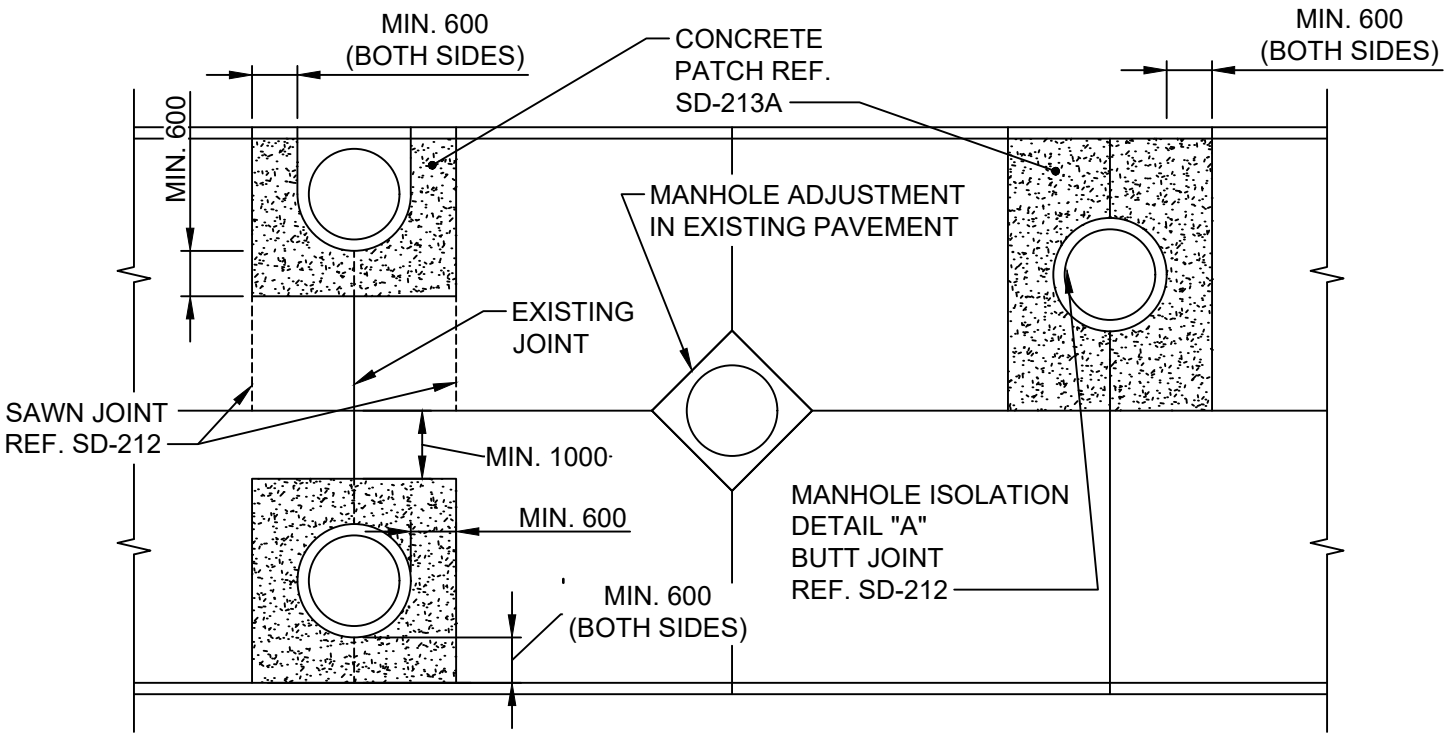

ISOLATION FOR M.H. ADJUSTMENT OR RESTORATION

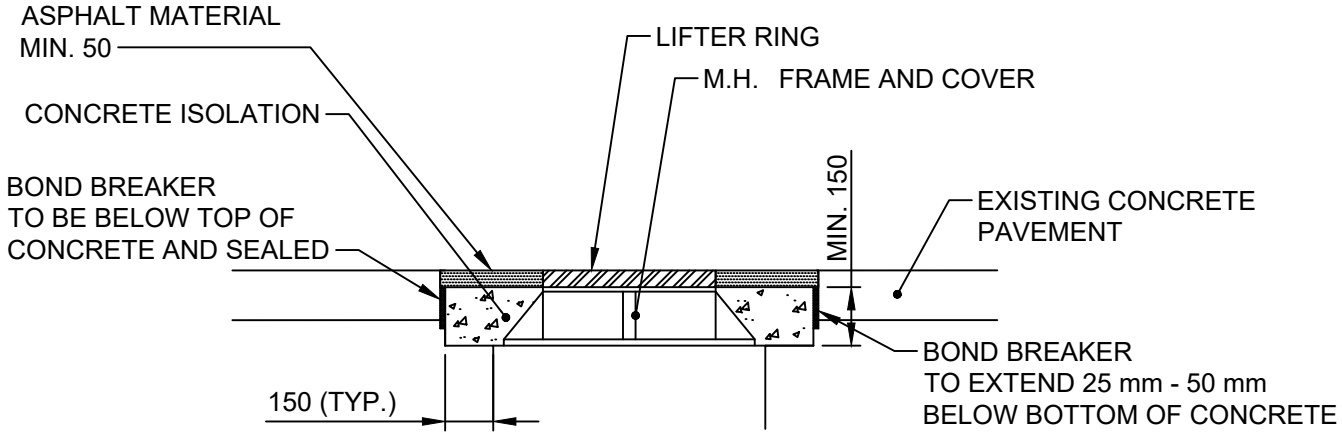

DETAIL "A"

DIMENSIONS IN MILLIMETRES

THE CITY OF WINNIPEG
PUBLIC WORKS DEPARTMENT

Reference Spec. No.
CW 3210, CW 3230, CW 3310

Revisions

No.	Date	Description	By
1.	DEC 25	GENERAL REVISION	R.B.

MANHOLE ISOLATION DETAIL
IN EXISTING PAVEMENTS

Designed By: A.G.	Drawn By: R.B.	Scale : N.T.S.
Checked By: B.K.	Date: 2025–12–15	Drawing No. SD–220B
Approved: PAVEMENT MANAGEMENT BRANCH		

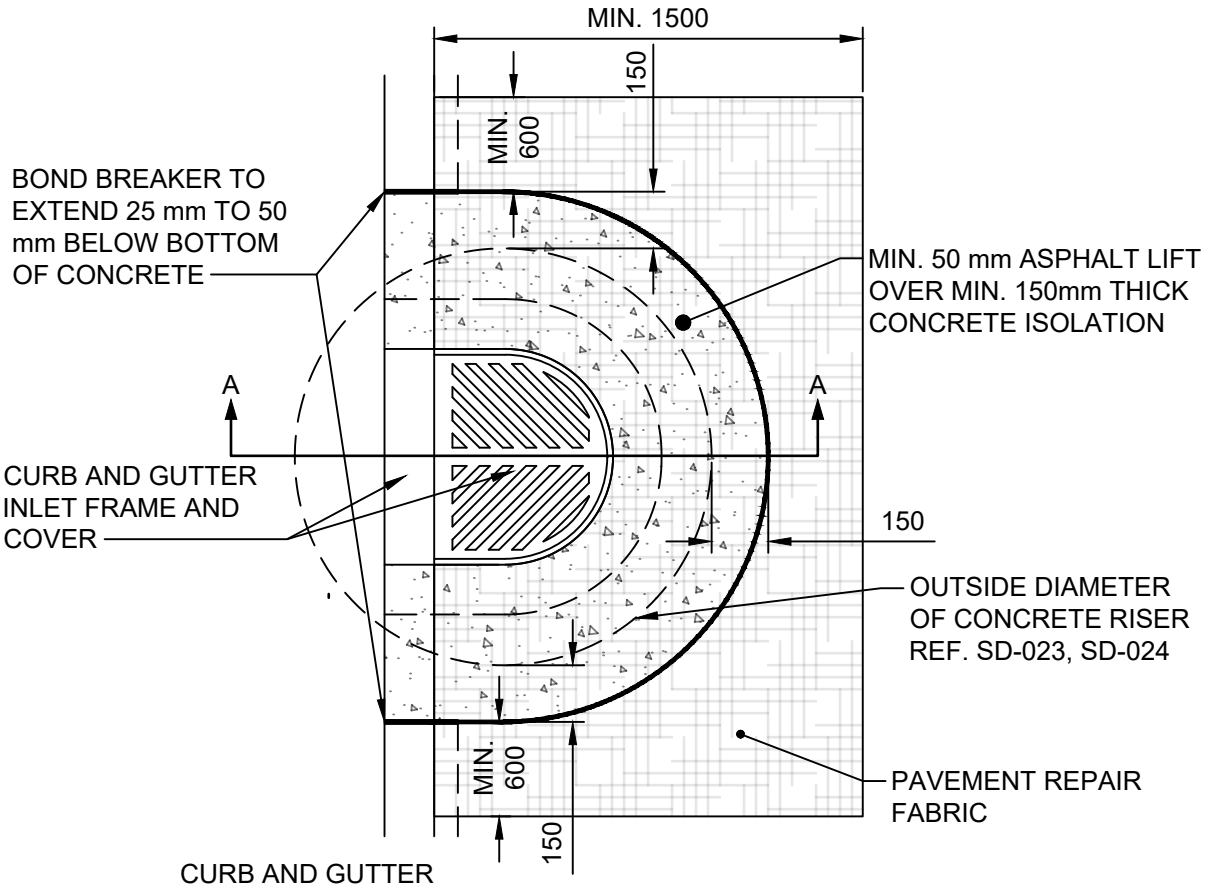

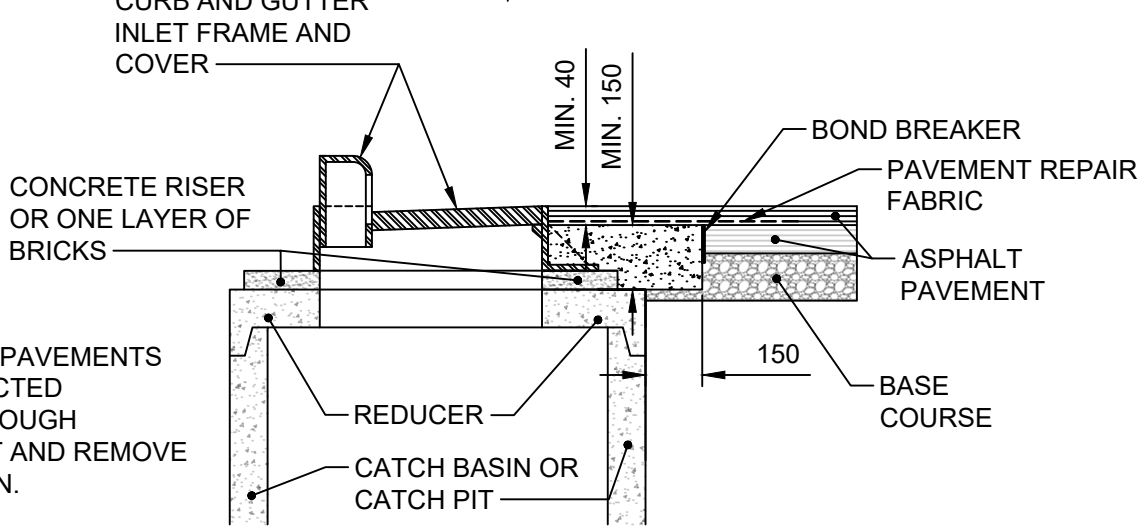

NOTE:

CURB FOR ASPHALT PAVEMENTS SHALL BE CONSTRUCTED CONTINUOUSLY THROUGH ISOLATION. SAW CUT AND REMOVE CURB FOR ISOLATION.

SECTION A-A

DIMENSIONS IN MILLIMETRES

Winnipeg

THE CITY OF WINNIPEG
PUBLIC WORKS DEPARTMENT

Reference Spec. No.
CW 3325

Revisions

No.	Date	Description	By

BARRIER CURB AND GUTTER INLET ISOLATION DETAIL FOR NEW ASPHALT PAVEMENTS

Designed By: A.G.	Drawn By: T.K.	Scale : N.T.S.
Checked By: B.K.	Date: 2025-12-15	Drawing No. SD-220E
Approved: PAVEMENT MANAGEMENT BRANCH		

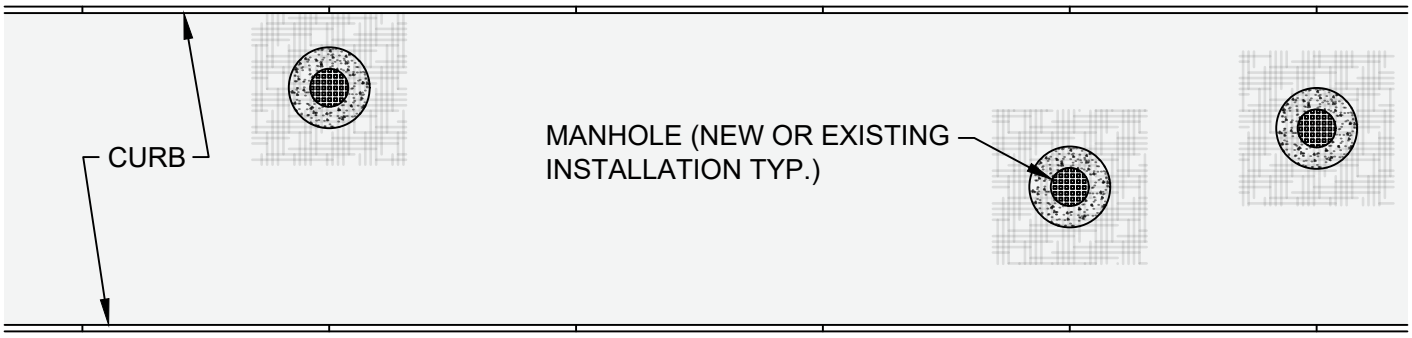

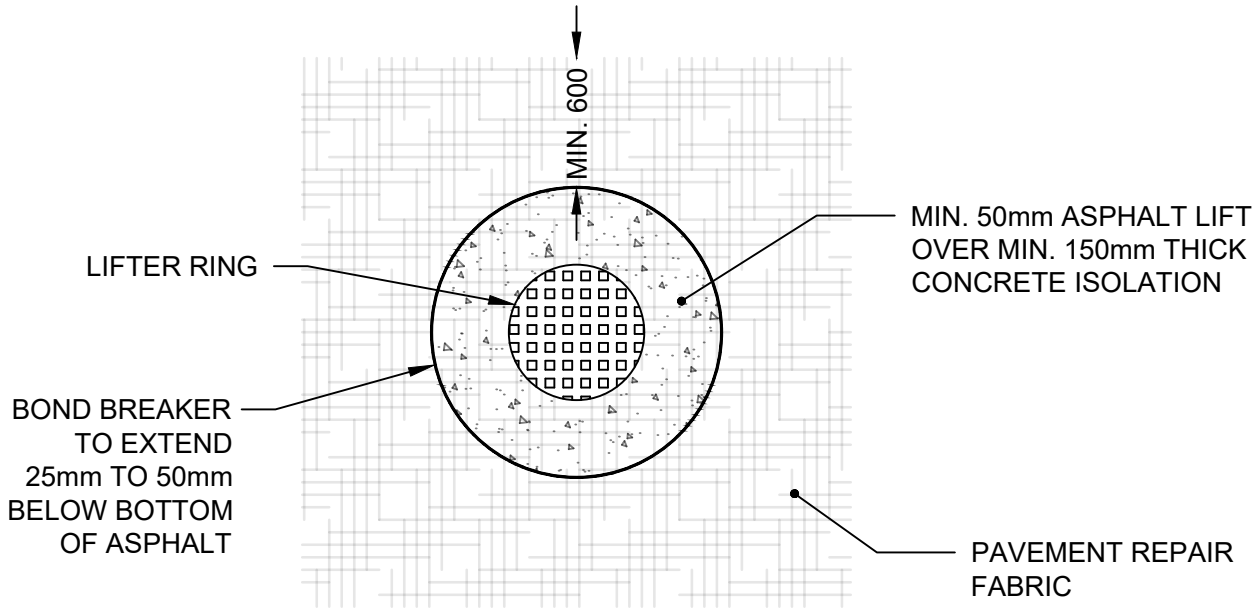

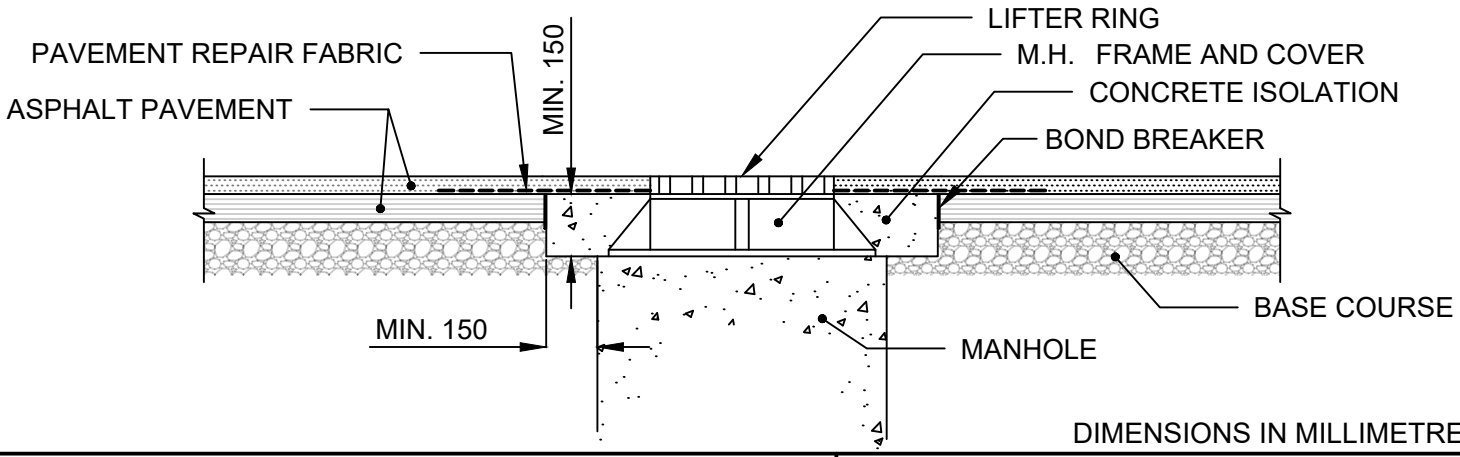

DIMENSIONS IN MILLIMETRES

THE CITY OF WINNIPEG
PUBLIC WORKS DEPARTMENT

Reference Spec No.
CW 3310

Revisions

No.	Date	Description	By

MANHOLE ISOLATION DETAIL FOR ASPHALT PAVEMENTS

Designed By: A.G.	Drawn By: T.K.	Scale : N.T.S.
Checked By: B.K.	Date: 2026-1-15	Drawing No. SD-220G
Approved: PAVEMENT MANAGEMENT BRANCH		

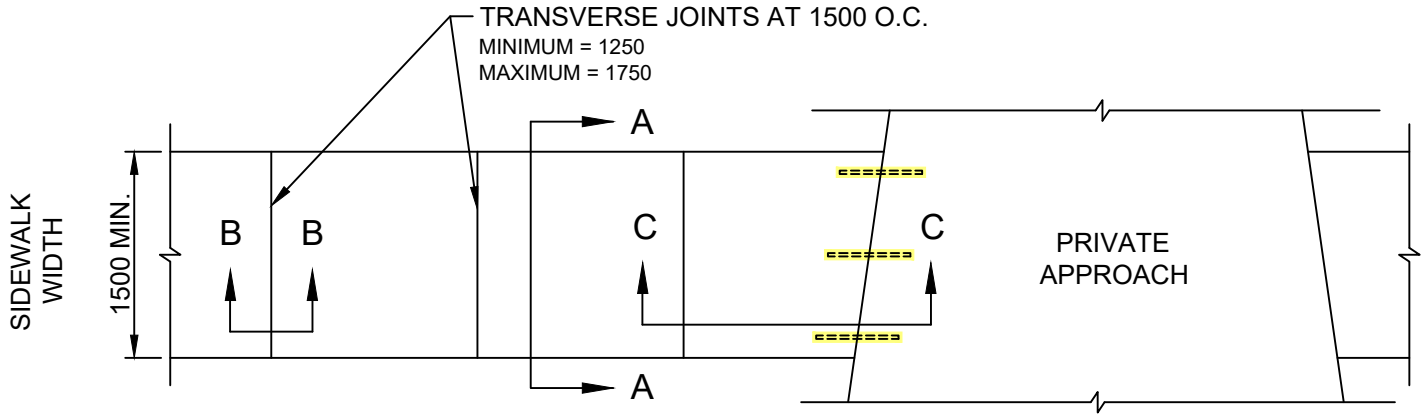

PLAN

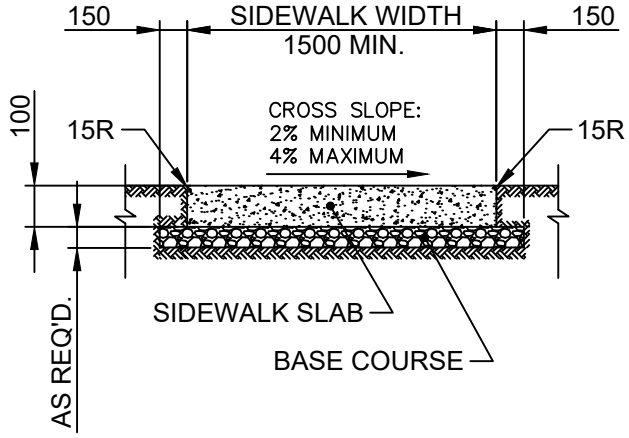

SECTION A - A

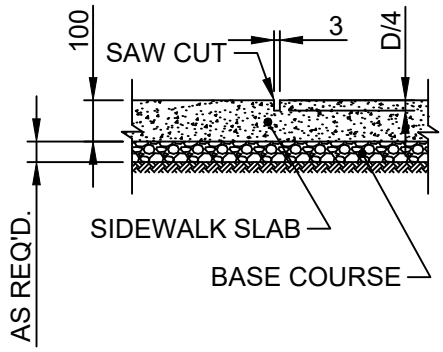

SECTION B - B

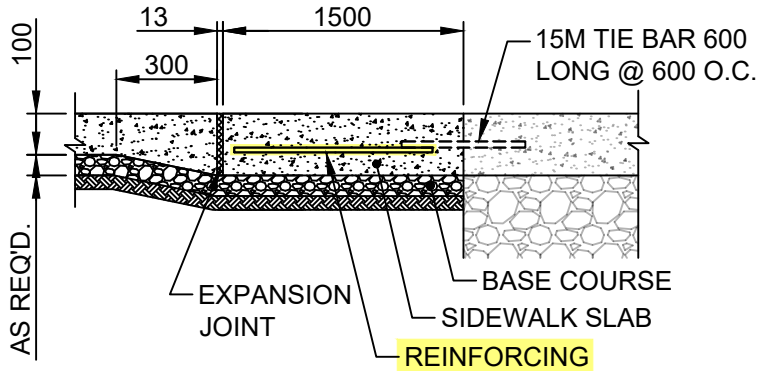

SECTION C - C

NOTE:

1. SIDEWALK SLAB SURFACE WILL BE GIVEN A TEXTURED BROOM FINISH. NO EDGER MARKS WILL BE LEFT

2. LONGITUDINAL JOINTS AT 1500 O.C. MAXIMUM

3. FOR PRIVATE APPROACHES WITH CURBS, CURB RAMPS SHALL BE INSTALLED

DIMENSIONS IN MILLIMETRES

THE CITY OF WINNIPEG
PUBLIC WORKS DEPARTMENT

Reference Spec. No.
CW 3235, CW 3310, CW 3325

Revisions

No.	Date	Description	By
1.	DEC 25	ADDED TIE BARS AND REINFORCING	T.K.

CONCRETE SIDEWALK

Designed By: A.G.	Drawn By: R.B.	Scale : N.T.S.
Checked By: B.K.	Date: 2025–12–15	Drawing No. SD–228A
Approved: PAVEMENT MANAGEMENT BRANCH		

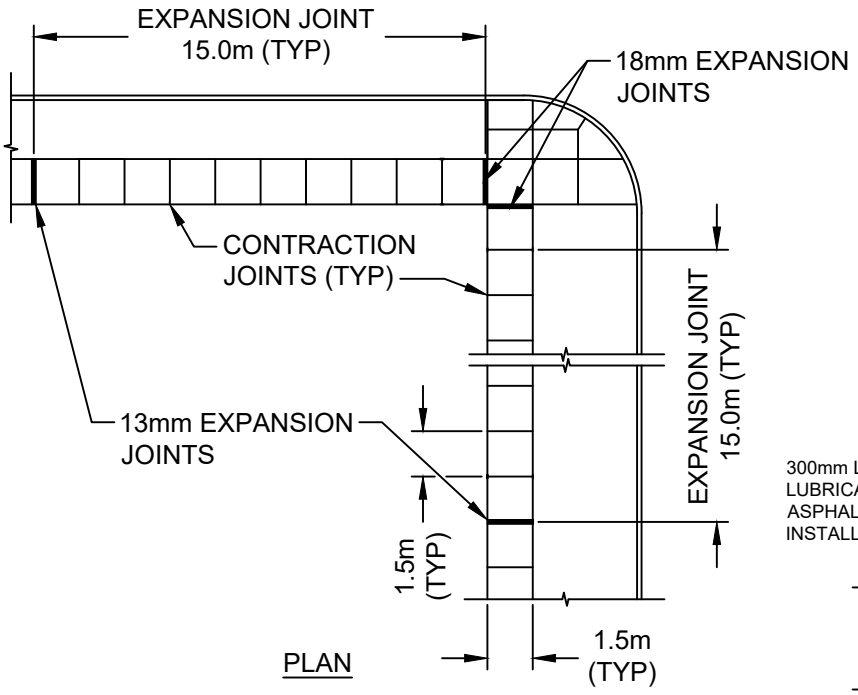

PLAN

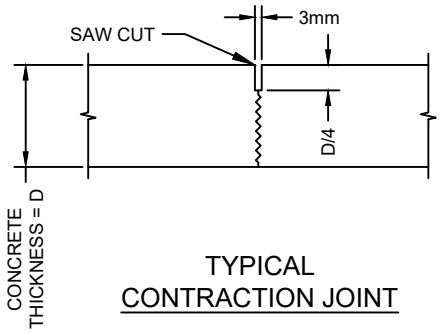

TYPICAL
CONTRACTION JOINT

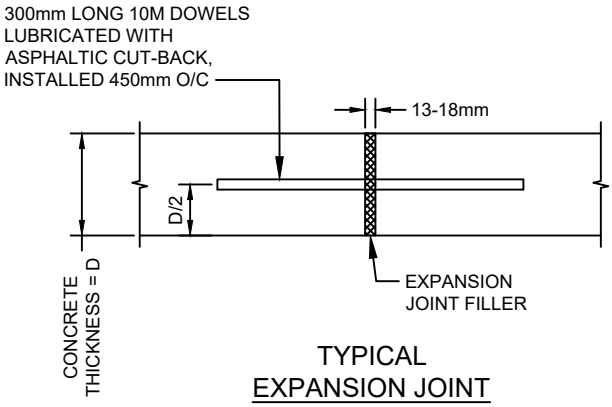

TYPICAL
EXPANSION JOINT

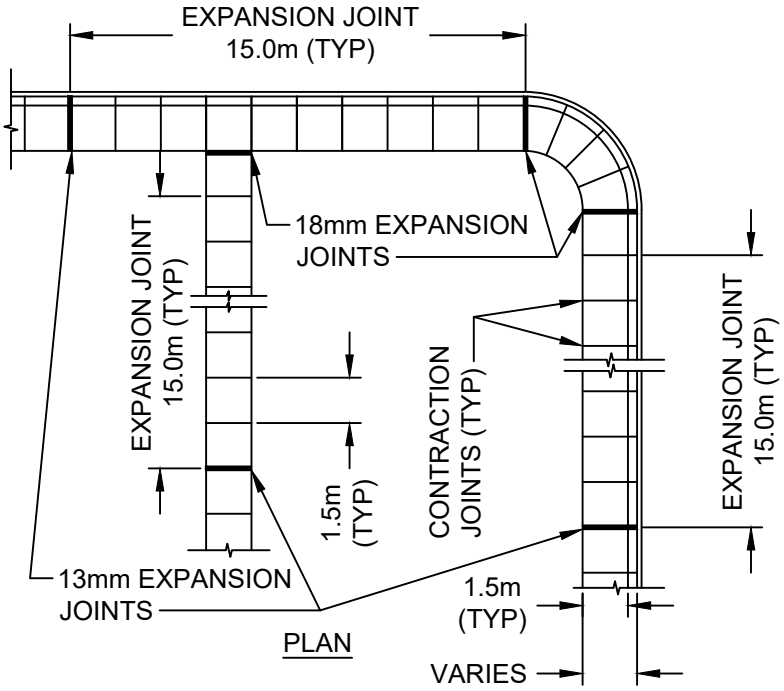

PLAN

NOTES:

1. IF SIDEWALK IS CONSTRUCTED DURING COLD WEATHER CONCRETING PERIOD, EXPANSION JOINTS SHALL BE INSTALLED EVERY 12.0m
2. EXPANSION JOINTS SHALL NOT BE INSTALLED WHEN CONSTRUCTING MONOLITHIC CURB AND SIDEWALK
3. EXPANSION JOINTS SHALL BE INSTALLED WHEN INSTALLING SEPARATE CONCRETE SPLASH STRIP
4. WHEN REPLACING HEAVED PANELS IN AN EXISTING SIDEWALK, EXPANSION JOINTS SHALL BE INSTALLED ON BOTH ENDS OF THE REPLACED PANELS
5. DOWELS SHALL BE DRILLED AND EXPANSION JOINT FILLER INSTALLED WHEN TYING INTO EXISTING SIDEWALK

Winnipeg

THE CITY OF WINNIPEG
PUBLIC WORKS DEPARTMENT

Reference Spec. No.
CW 3325

Revisions

No.	Date	Description	By

SIDEWALK EXPANSION JOINTS

Designed By: A.G.	Drawn By: R.B.	Scale : N.T.S.
Checked By: B.K.	Date: 2025–12–15	Drawing No. SD–228D
Approved: PAVEMENT MANAGEMENT BRANCH		

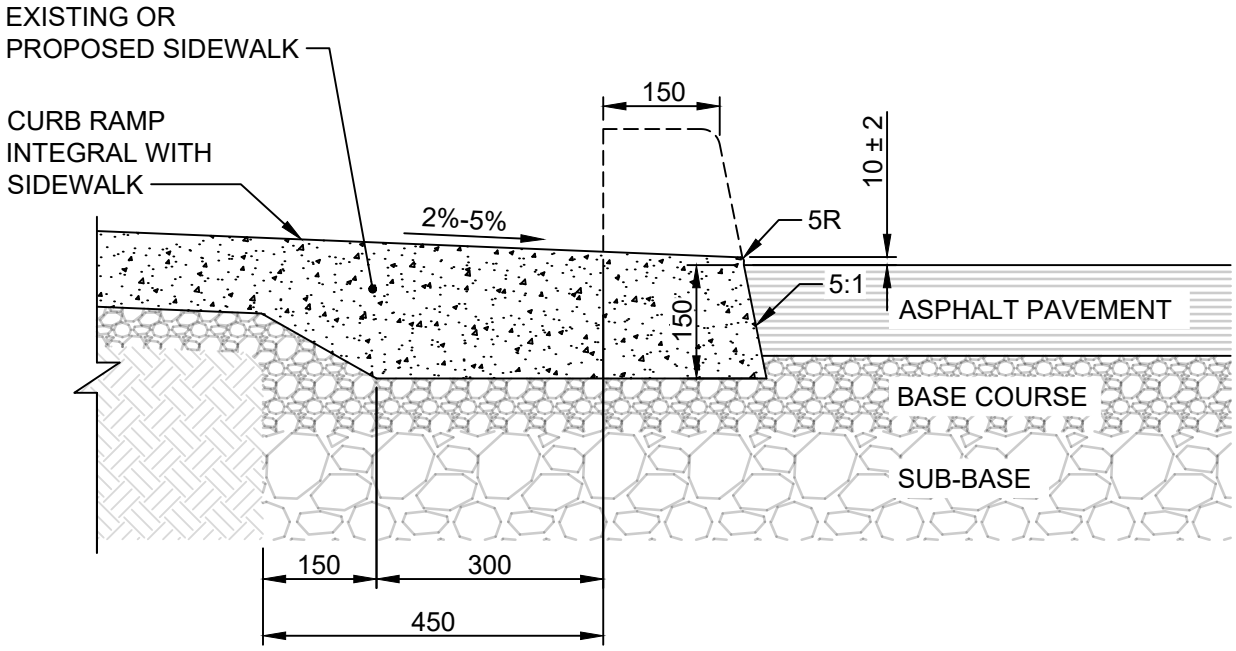

NOTES:

1. TRANSVERSE SAW CUT EVERY 3m OR AT PAVEMENT JOINTS
2. TRANSVERSE SAW CUTS ARE TO BE A MAXIMUM DEPTH OF 25mm
3. FACE OF CURB SHALL BE SEALED IN ACCORDANCE WITH CW 3250

DIMENSIONS IN MILLIMETRES

Winnipeg

THE CITY OF WINNIPEG
PUBLIC WORKS DEPARTMENT

Reference Spec. No.
CW 3325

Revisions

No.	Date	Description	By

CURB RAMP FOR ASPHALT PAVEMENT

Designed By: A.G.	Drawn By: T.K.	Scale : N.T.S
Checked By: B.K.	Date: 2025-12-15	Drawing No. SD-229F
Approved: PAVEMENT MANAGEMENT BRANCH		

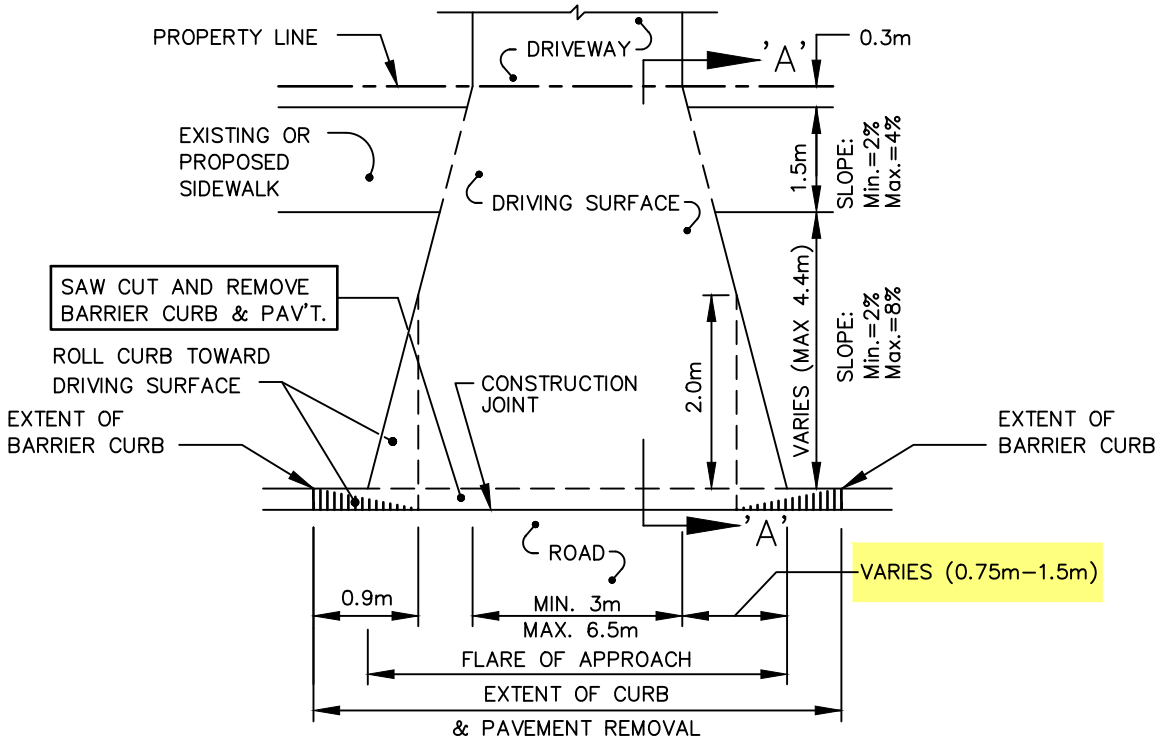

PLAN

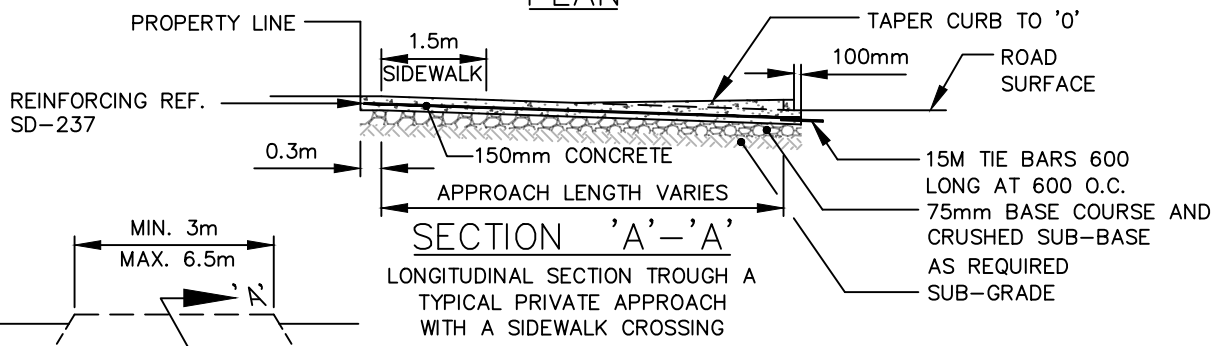

SECTION 'A'–'A'

LONGITUDINAL SECTION TROUGH A TYPICAL PRIVATE APPROACH WITH A SIDEWALK CROSSING

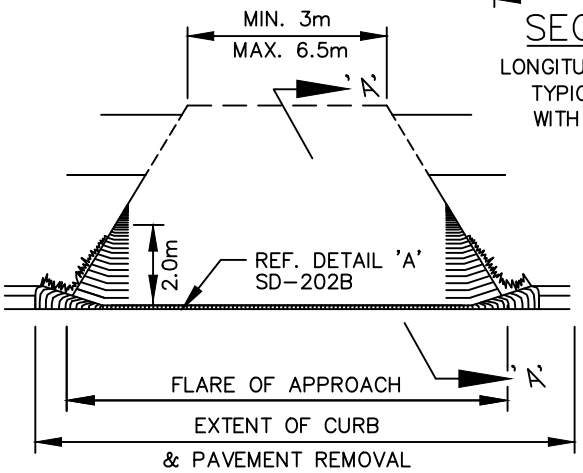

FRONTAL PERSPECTIVE OF FINISHED PRIVATE APPROACH

NOTES:

1. M.H. ISOLATIONS TO BE APPROVED BY CONTRACT ADMINISTRATOR.
2. CONTRACTION JOINT AS REQUIRED TO MATCH STREET TRANSVERSE JOINTS.

Winnipeg

THE CITY OF WINNIPEG
PUBLIC WORKS DEPARTMENT

Reference Spec. No.
CW 3230, CW 3240, CW 3310

Revisions

No.	Date	Description	By
1.	DEC 25	CHANGED FLARE TO A RANGE	A.G.

RESIDENTIAL APPROACH–CONCRETE

(WITH EXISTING BARRIER CURB)

Designed By: B.P.	Drawn By: T.G.A.	Scale : N.T.S.
Checked By: B.P.	Date: 2025–12–15	Drawing No. SD–235
Approved: PAVEMENT MANAGEMENT BRANCH		

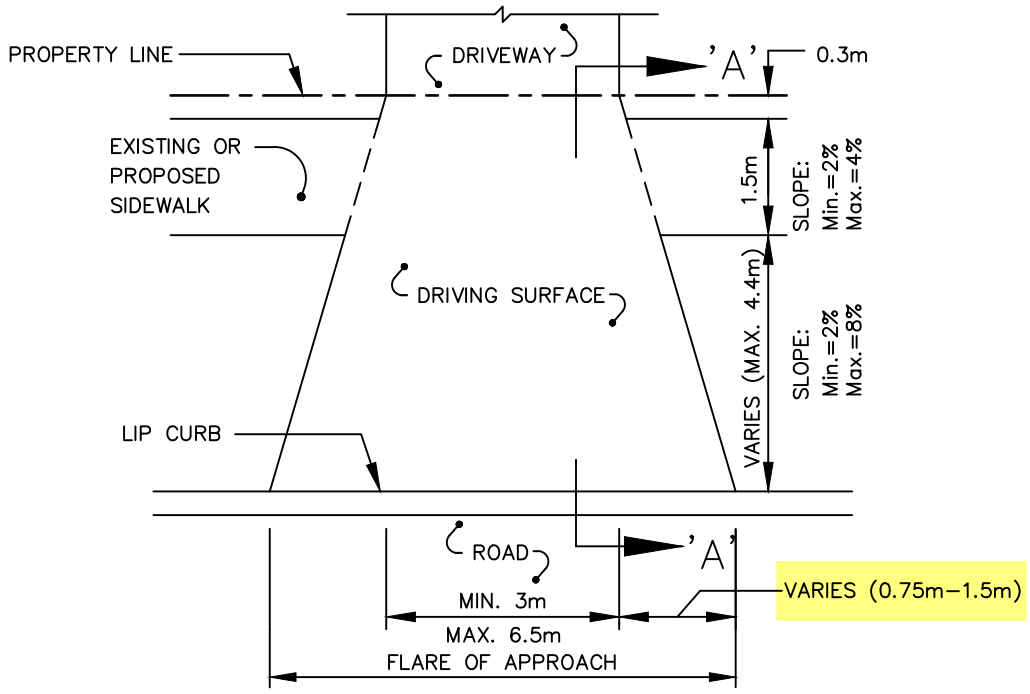

PLAN

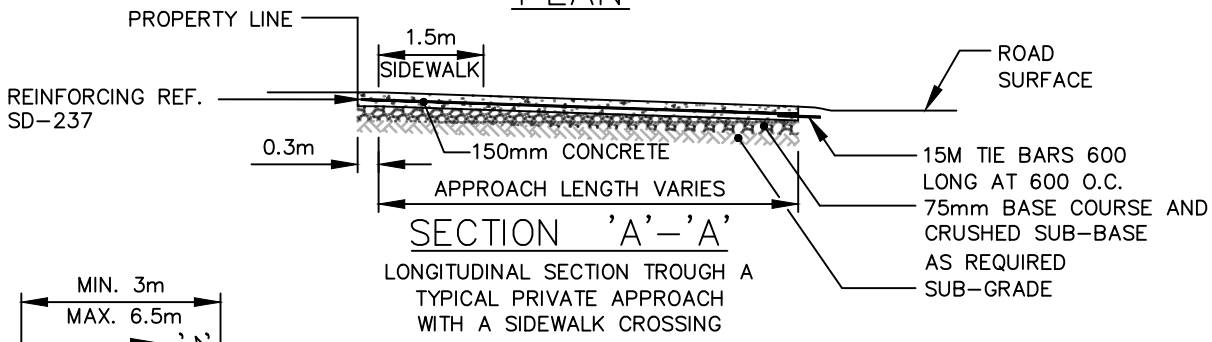

SECTION 'A'–'A'

LONGITUDINAL SECTION TROUGH A TYPICAL PRIVATE APPROACH WITH A SIDEWALK CROSSING

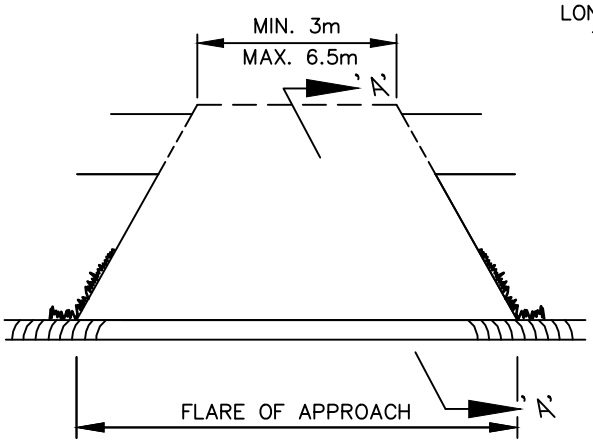

FRONTAL PERSPECTIVE OF FINISHED PRIVATE APPROACH

NOTES:

1. APPLICABLE FOR EXISTING LIP CURBS <80mm. IF EXISTING CURB >80mm REF SD–202B.
2. M.H. ISOLATIONS TO BE APPROVED BY CONTRACT ADMINISTRATOR.
3. CONTRACTION JOINTS AS REQUIRED TO MATCH STREET.

THE CITY OF WINNIPEG
PUBLIC WORKS DEPARTMENT

Reference Spec. No.
CW 3230, CW 3310, CW 3240

Revisions

No.	Date	Description	By
1.	DEC 25	CHANGED FLARE TO A RANGE	A.G.

RESIDENTIAL APPROACH–CONCRETE (WITH EXISTING LIP CURB)

Designed By: D.P.	Drawn By: T.K.	Scale : N.T.S.
Checked By: B.P.	Date: 2025–12–15	Drawing No. SD–236
Approved: SURFACE WORKS COMMITTEE		

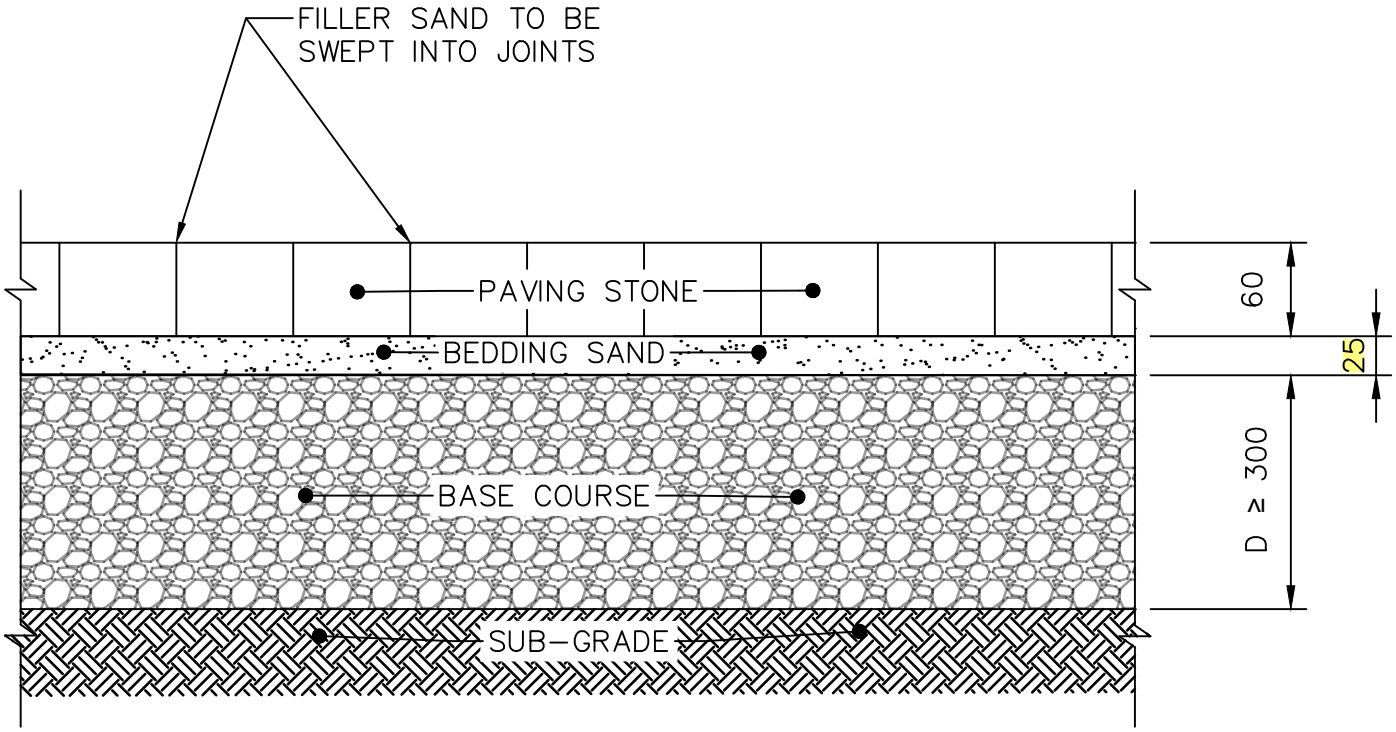

DIMENSIONS IN MILLIMETRES

THE CITY OF WINNIPEG
PUBLIC WORKS DEPARTMENT

Reference Spec. No.
CW 3110, CW 3330

Revisions

No.	Date	Description	By
1.	DEC 25	GENERAL REVISION	R.B.

INTERLOCKING PAVING STONE DETAIL
FOR RESIDENTIAL APPROACHES

Designed By: A.G.	Drawn By: R.B.	Scale : N.T.S.
Checked By: B.K.	Date: 2025-12-15	Drawing No. SD-240A
Approved: PAVEMENT MANAGEMENT BRANCH		

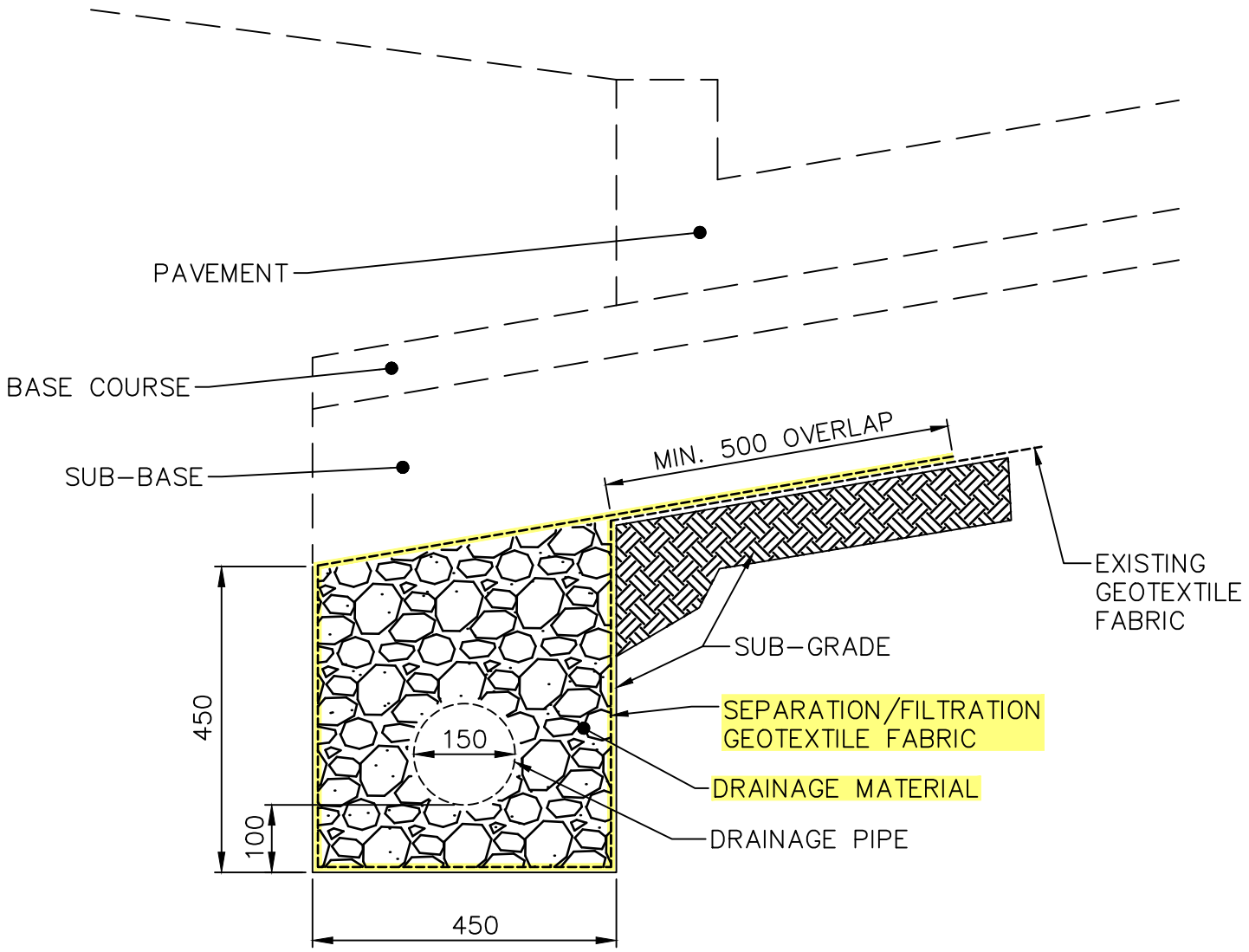

DIMENSIONS IN MILLIMETERS

THE CITY OF WINNIPEG
PUBLIC WORKS DEPARTMENT

Reference Spec. No.
CW 3110, CW 3120, CW 3130

Revisions

No.	Date	Description	By
1.	DEC 25	GENERAL REVISION	A.G.

SUBDRAIN INSTALLATION DETAIL

Designed By: B.P.	Drawn By: R.B.	Scale : N.T.S.
Checked By: A.G.	Date: 2025-12-15	Drawing No. SD-245
Approved: PAVEMENT MANAGEMENT BRANCH		